Temposonics®

Magnetostrictive Linear Position Sensors

MHRM Analog
Data Sheet

– For embedded or externally threaded installation

– Sensor rod with Ø 7 mm or Ø 10 mm

– Resolution: ±0.1 mm typ.

– Compliant with EN 50121-3-2

MEASURING TECHNOLOGY

For position measurement, the absolute, linear Temposonics® position sensors make use of the properties offered by the specially designed magnetostrictive waveguide. Inside the sensor a torsional strain pulse is induced in the waveguide by momentary interaction of two magnetic fields. The interaction between these two magnetic fields produces a strain pulse, which is detected by the electronics at the head of the sensor. One field is produced by a moving position magnet, which travels along the sensor rod with the waveguide inside. The other field is generated by a current pulse applied to the waveguide. The position of the moving magnet is determined precisely by measuring the time elapsed between the application of the current pulse and the arrival of the strain pulse at the sensor electronics housing. The result is a reliable position measurement with high accuracy and repeatability.

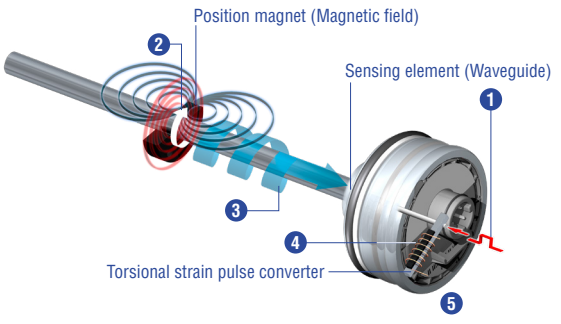

Measurement Cycle

1	Current pulse generates magnetic field
2	Interaction with position magnet field generates torsional strain pulse
3	Torsional strain pulse propagates
4	Strain pulse detected by converter
5	Time-of-flight converted into distance

Fig. 1: Time-based magnetostrictive position sensing principle

PRODUCT DESCRIPTION AND TECHNOLOGY

The MHRM sensor extends the rugged design of the Temposonics® MH-Series sensors to railway applications. With two mounting styles, the responsive magnetostrictive linear position sensors can be integrated into most installations. The inherent absolute capabilities ensure that the MHRM sensor is always ready.
The new MHRM model meets the requirements for shock and vibration according to EN 61373 and IEC 60068-2-64 and are compliant with EN 50121-3-2 and EN 61000-6-x (see technical data).

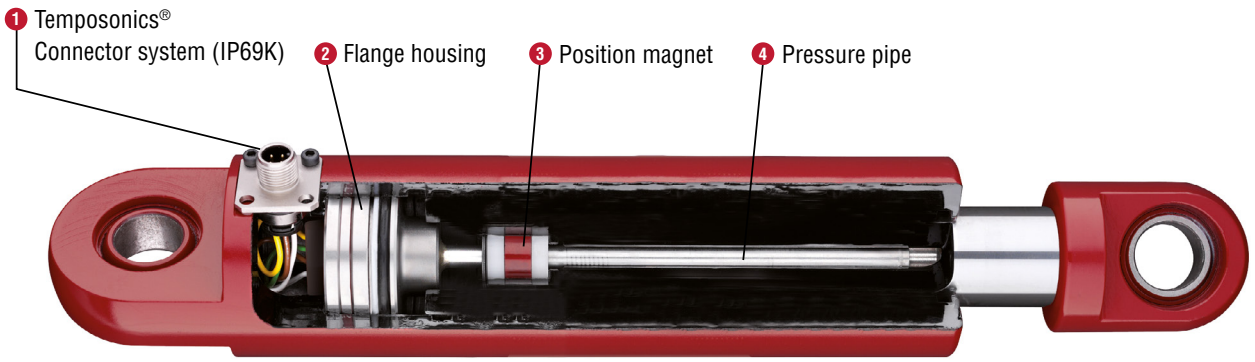

Simple mechanics
The extremely robust sensor consists of the following main parts:
1 The innovative connector system is easy to install without soldering or crimping. It is dust-and waterproof up to IP69K.
2 The flange housing with built-in electronics and signal converter.
3 The position magnet as only moving part, is assembled into the piston bottom. This permanent magnet travels wear-free and contactless along the pressure pipe and measures the actual position.
4 The pressure pipe placed within the drilled piston rod contains the protected magnetostrictive sensing element.

Fig. 2: In-Cylinder installation

THE INTERCONNECTION PLUG

MTS Sensors presents the Temposonics® InterConnection plug combined with our reliable M12 connector system. The connection plug is modular, configurable and can be combined with all common connector systems. The M12 connector meets the highest protection requirements that are important for harsh environments in mobile hydraulic applications. The IP69K protection type means

- ***Safe and easy installation***
- ***No soldering or crimping of connecting leads***

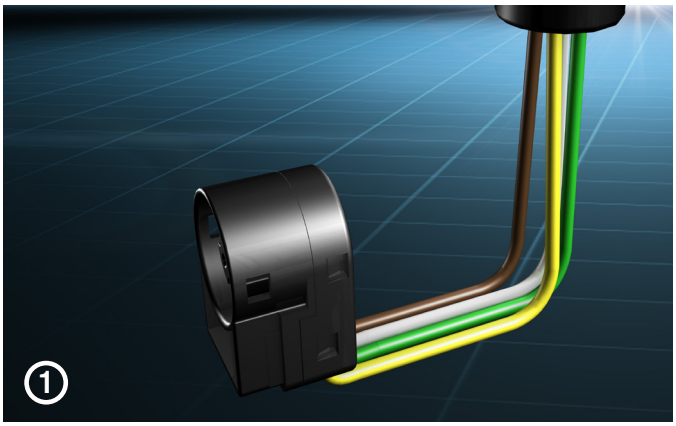

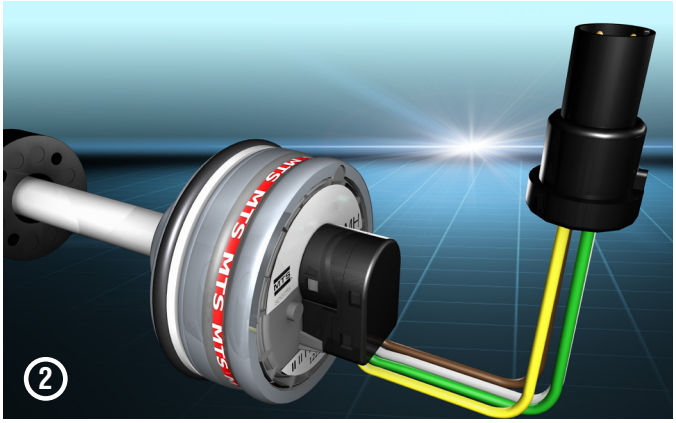

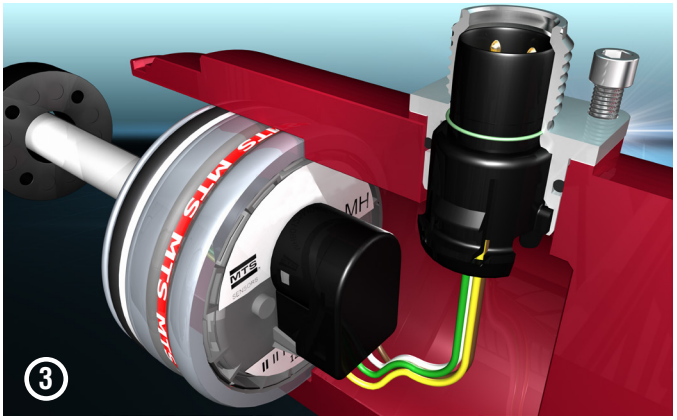

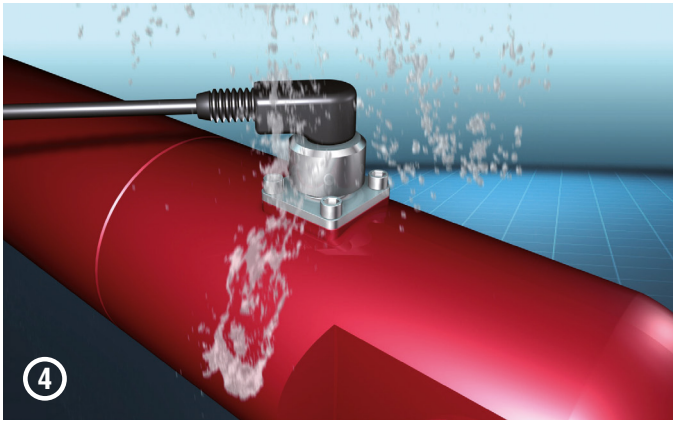

1. The InterConnection plug invented by MTS Sensors.
2. The InterConnection plug combined with our reliable M12 connector system.
3. The connector insert is taken out of the cylinder through a bore hole. The flange can easily be clicked in position from outside. Four standard screws must be tightened to mount the connector system on the cylinder. In the case of using angled type connectors, the connector insert can be rotated inside the flange in 45° steps.
4. With a corresponding mating plug the connector system fulfills an IP rating of IP69K.

MHRM EMBEDDED – TECHNICAL DRAWING

Embedded model with Ø 7 mm sensor rod and flat rod end (MHE-7-A-...)

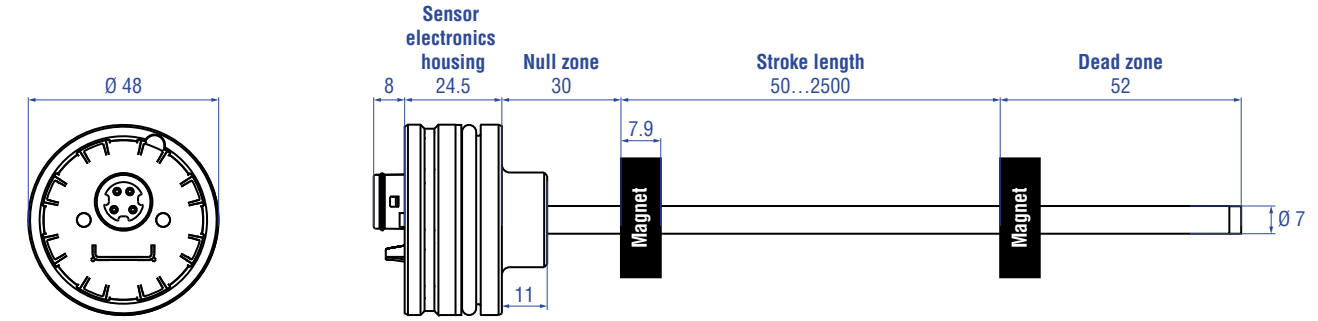

Embedded model with Ø 10 mm sensor rod and flat rod end (MHE-1-A-...)

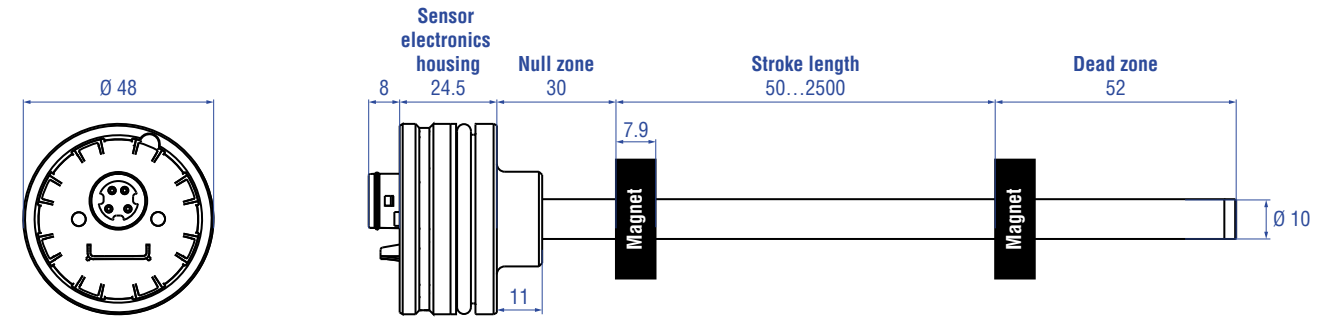

Embedded model with Ø 10 mm sensor rod and M6 female thread rod end (MHE-1-R-...)

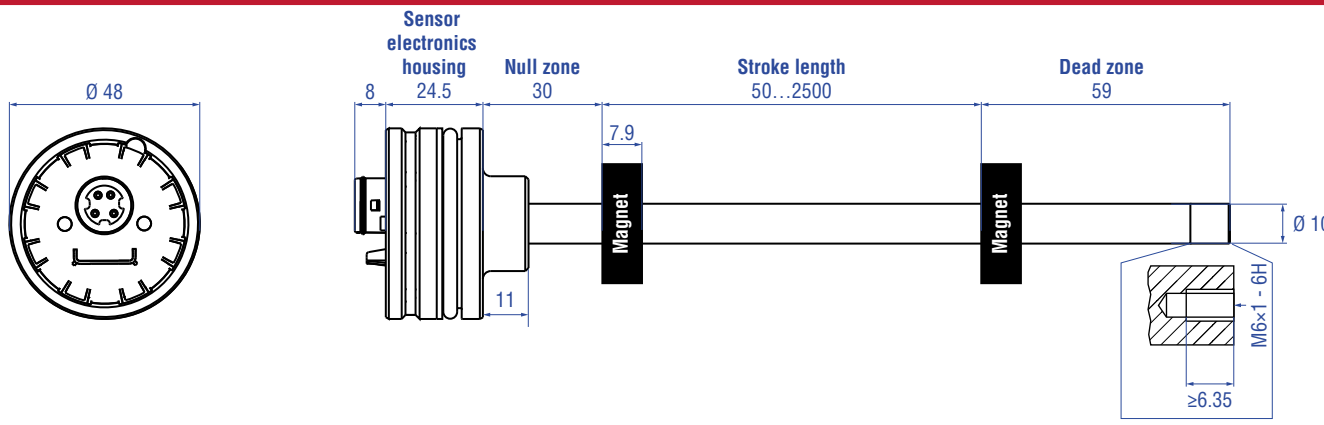

Embedded model with Ø 10 mm sensor rod and M8 male thread rod end (MHE-1-U-...)

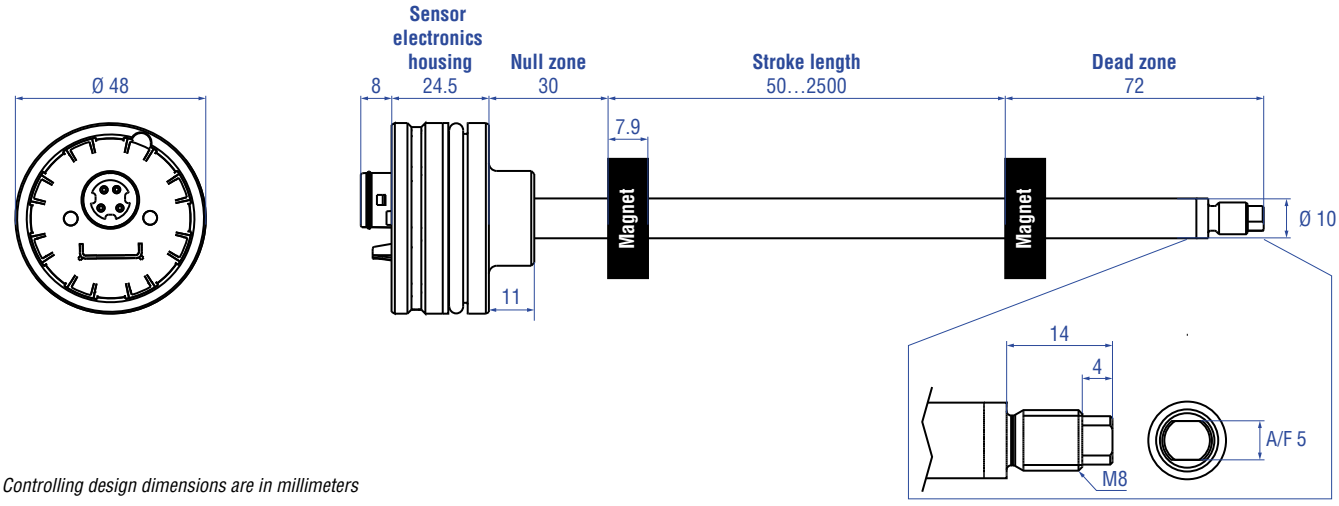

Controlling design dimensions are in millimeters

Fig. 3: MHRM embedded models

MHRM EMBEDDED – TECHNICAL DATA

Output			
Signal characteristic	Analog output restricted by noise or A/D converter of control unit		
Voltage	0.25…4.75 VDC; 0.5…4.5 VDC; 0.25…9.75 VDC; 4.75…0.25 VDC; 4.5…0.5 VDC; 9.75…0.25 VDC		
Current	4…20 mA; 20…4 mA		
Measured value	Position		
Measurement parameters			
Resolution	±0.1 mm typical		
Linearity	0050…0250 mm	0255…2000 mm	2005…2500 mm
	≤ ±0.1 mm	±0.04 % (F.S.)	≤ ±0.8 mm
Hysteresis	≤ ±0.2 mm		
Setpoint tolerance	±2 mm		
Operating conditions			
Operating temperature	–40…+105 °C		
Storage temperature	–25…+65 °C		
Humidity	90 % relative humidity, no condensation		
Ingress protection – M12 connector	IP67 / IP69K (correctly fitted)		
Ingress protection – Sensor housing	IP67		
Shock test (according to EN 50155)	According to EN 61373 Cat2 (Bogie) and Cat3 (Axle)		
Vibration test (according to EN 50155)	According to IEC 60068-2-64-Fn Cat3 (Axle)		
EMC test (according to EN 50155)	EN 50121-3-2 ISO 14982 Agricultural and forest machines EN 13309 Construction machines ISO 16750-2 Electromagnetic immunity according to EN 61000-6-2 Electromagnetic emission according to EN 61000-6-3 RF immunity 200 V/m per ISO 11452-2/-4		
PCB coating	According to EN 50155		
Pressure (according to DIN EN ISO 19879)*	Ø 7 mm sensor rod	Ø 10 mm sensor rod	
PN (nominal operating)	300 bar	350 bar	
P_{MAX} (max. overload)	400 bar	450 bar	
P_{STATIC} (proof pressure)	525 bar	625 bar	
Design / Material			
Housing lid	Compound PBT (glass fiber reinforced plastic); sealing ring: TPU		
Sealing	O-ring NBR with back-up ring PTFE		
Sensor electronics housing	Stainless steel 1.4305 (AISI 303)		
Sensor rod – Ø 7 mm	Stainless steel 1.4301 (AISI 304)		
Sensor rod – Ø 10 mm	Stainless steel 1.4306 (AISI 304L)		
Stroke length	50…2500 mm		
Mechanical mounting			
Mounting instruction	Please consult the technical drawings		
Mounting position	Any		
Electrical installation			
Connector	InterConnection plug		
Operating voltage	12 / 24 VDC (8…32 VDC)		
	24 VDC supply	12 VDC supply	
Load (output mA)	R_L ≤ 500 Ω	R_L ≤ 250 Ω	
Load (output VDC)	R_L ≥ 10 kΩ	R_L ≥ 10 kΩ	
Inrush current	4.5 A / 2 ms	2.5 A / 2 ms	
Operating voltage ripple	1 $\%_{PP}$		
Power drain	≤ 1 W		
Over voltage protection (VDC-GND)	Up to +36 VDC		
Polarity protection (GND-VDC)	Up to –36 VDC		
Insulation resistance	R ≥ 10 MΩ @ 60 sec according to EN 50155		
Dielectric strength	708 VDC (DC ground to machine ground) according to EN 50155		

***/ According to calculations under use of the FKM guideline**

Cycles	**Ø 7 mm sensor rod**	**Ø 10 mm sensor rod**
Dynamic pressure: < 2 × 10^6 pressure cycles	300 bar	350 bar
Static pressure: < 2 × 10^4 pressure cycles	400 bar	450 bar
Proof pressure: Maximum 5 minutes testing time for cylinder pressure test	525 bar	625 bar

MECHANICAL INSTALLATION – MHRM EMBEDDED

Installation in a hydraulic cylinder

The robust Temposonics® MH sensor is designed for direct stroke measurement in hydraulic cylinders.
The Temposonics® MH sensor can be installed from the head side or the rod side of the cylinder depending on the cylinder design.
In both installation methods, the sensor seals the cylinder by using an O-Ring and backup ring which is installed on the sensor housing.

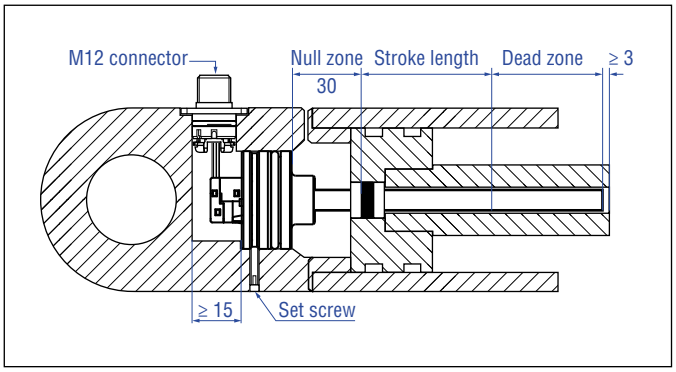

Fig. 4: Example of In-Cylinder assembly

NOTICE

The bore depth in piston:
Null zone + Stroke length + Dead zone + > 3 mm

Space requirements

B	D	d	H	h
52 mm	48H8	39.9 $^{+0.2}$ mm	25 mm	> 15 mm

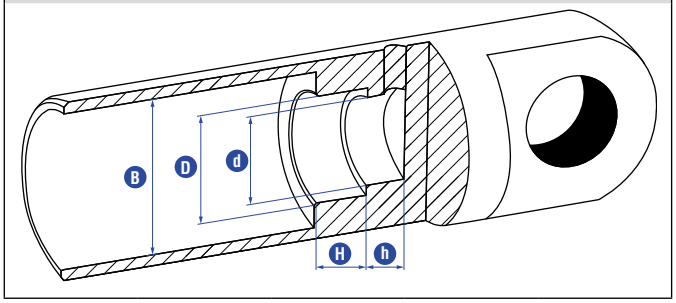

Fig. 5: Space requirements for cylinder

- The position magnet shall not touch the pressure pipe.
- Do not exceed the operating pressure.
- Note the piston rod drilling:
  - Ø 7 mm rod: ≥ Ø 10 mm
  - Ø 10 mm rod: ≥ Ø 13 mm

Set screw

e.g. retaining with set screw ISO 4026 M5×10 (with flat point!).
Fastening torque: 0.44 Nm to 0.50 Nm
Notice: *Ensure threads are free of oil, grease and debris*

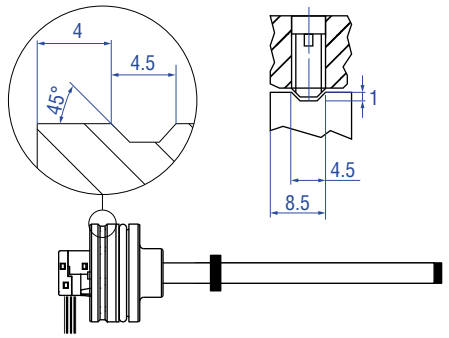

Fig. 6: Set screw

Controlling design dimensions are in millimeters
Please refer to the installation manual for complete installation instructions!

CONNECTOR WIRING

Connector wiring for InterConnection plug with M12 connector

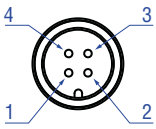

View on connector

Pin	L (Part no. 370715-14)	Q (Part no. 370715-12)
1	VDC	VDC
2	SIG_{GND}	SIG
3	VDC_{GND}	VDC_{GND}
4	SIG	SIG_{GND}

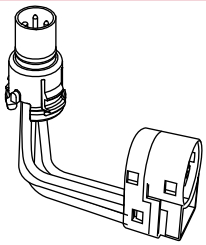

Connector wiring for InterConnection plug with cable outlet

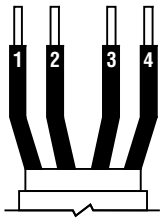

Wire	L (Part no. 370800)	Q (Part no. 370799)
1	VDC	VDC
2	SIG_{GND}	SIG
3	VDC_{GND}	VDC_{GND}
4	SIG	SIG_{GND}

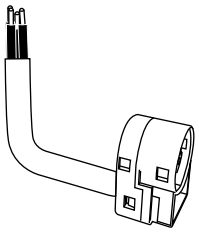

Fig. 7: Connecting wiring

MHRM EMBEDDED – ORDER CODE

1	2	3	4	5	6	7	8	9	10	11	12	13	14
M	H								3				
a			b	c	d				e	f			g

a	Sensor model
M H E	MH Railway – Embedded

b	Sensor rod diameter
7	Ø 7 mm
1	Ø 10 mm

c	End plug
A	Flat
R	M6 female thread *(only for Ø 10 mm sensor rods)*
U	M8 male thread *(only for Ø 10 mm sensor rods)*

d	Stroke length
X X X X	0050…2500 mm *(in 5 mm steps)*

e	Operation voltage
3	+12 / 24 VDC (8…32 VDC)

f	Output
Current	
A 0 1	4…20 mA
A 0 4	20…4 mA
Voltage	
V 1 1	0.25…4.75 VDC
V 1 2	0.50…4.5 VDC
V 1 3	4.75…0.25 VDC
V 1 4	4.5…0.5 VDC
V 2 3	0.25…9.75 VDC
V 2 5	9.75…0.25 VDC

g	Connection
D	InterConnection plug

DELIVERY

Sensor, O-ring, back-up ring

Accessories have to be ordered separately

Manuals, Software & 3D Models available at:
www.mtssensors.com

How to order

Example 1 – Sensor with M12 connector

Parts	Order codes / part numbers
1. Sensor	MHE-1-A-0400-3-V11-D
2. InterConnection plug with M12 connector	370715-12-0060
3. M12 flange	253 769
4. Position magnet	401 032

Example 2 – Sensor with cable outlet

Parts	Order codes / part numbers
1. Sensor	MHE-1-A-0400-3-V11-D
2. InterConnection plug (shielded cable)	370800-01000
3. Position magnet	401 032

INTERCONNECTION PLUG WITH M12 CONNECTOR – ORDER CODE

1	2	3	4	5	6	7	8	9	10	11	12
3	7	0	7	1	5						
a						b		c			

a	InterConnection plug					
3	7	0	7	1	5	InterConnection plug with M12 connector

b	Pin assignment	
1	2	M12 connector (Q: 1-3-4-2)
1	4	M12 connector (L: 1-3-2-4)

c	Wire length				
X	X	X	X		0060…0280 mm (in 20 mm steps)

INTERCONNECTION PLUG WITH CABLE OUTLET – ORDER CODE

1	2	3	4	5	6	7	8	9	10	11
3	7	0								
a						b				

a	InterConnection plug					
3	7	0	7	9	9	Shielded cable (Q: 1-3-4-2)
3	7	0	8	0	0	Shielded cable (L: 1-3-2-4)

b	Cable length					
0	0	3	0	0		300 mm
0	0	5	0	0		500 mm
0	0	7	5	0		750 mm
0	1	0	0	0		1000 mm
0	1	5	0	0		1500 mm
0	2	0	0	0		2000 mm
0	3	0	0	0		3000 mm
0	4	0	0	0		4000 mm
0	5	0	0	0		5000 mm
0	7	5	0	0		7500 mm
1	0	0	0	0		10000 mm

MHRM THREADED – TECHNICAL DRAWING

Threaded model with Ø 7 mm sensor rod and flat rod end (MHM-7-A-... / MHU-7-A-...)

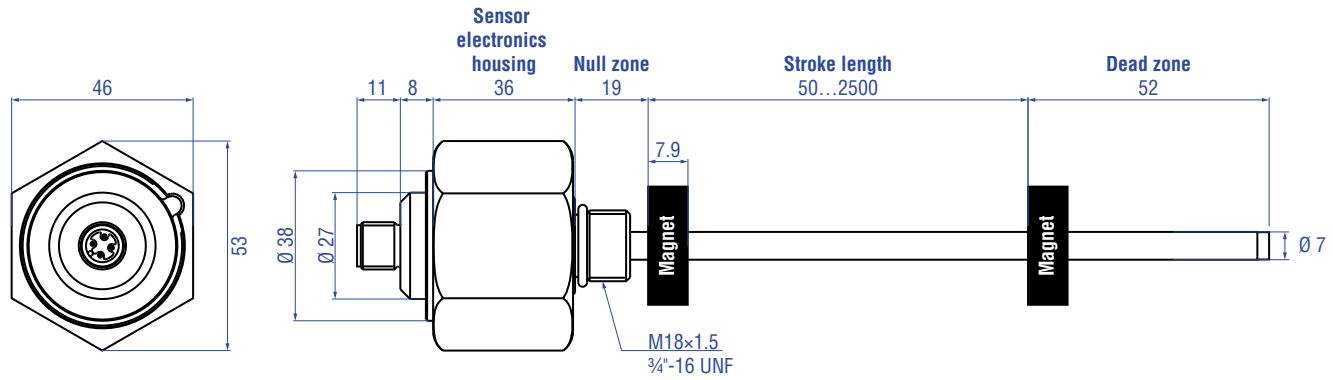

Threaded model with Ø 10 mm sensor rod and flat rod end (MHM-1-A-... / MHU-1-A-...)

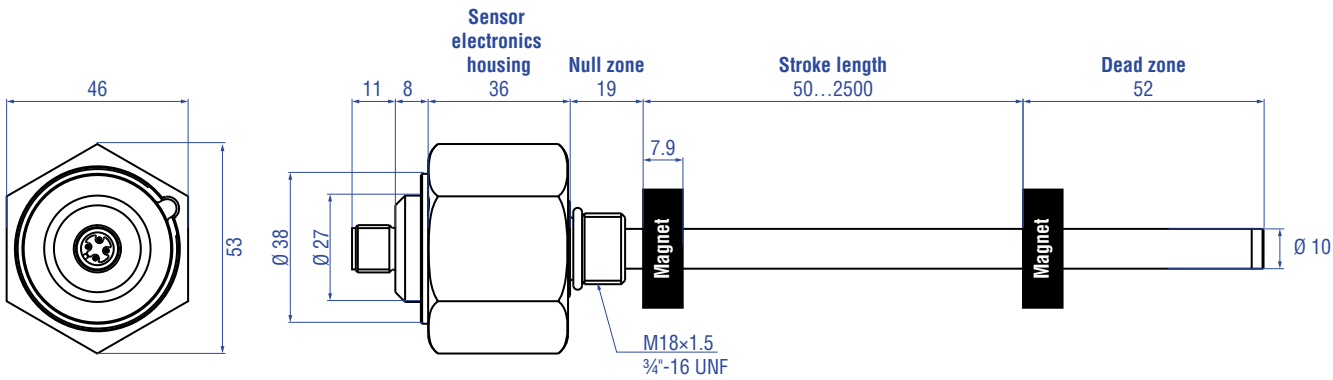

Fig. 8: MHRM threaded with ring magnet, part 1

Controlling design dimensions are in millimeters

Threaded model with Ø 10 mm sensor rod and M6 female thread rod end (MHM-1-R-... / MHU-1-R-...)

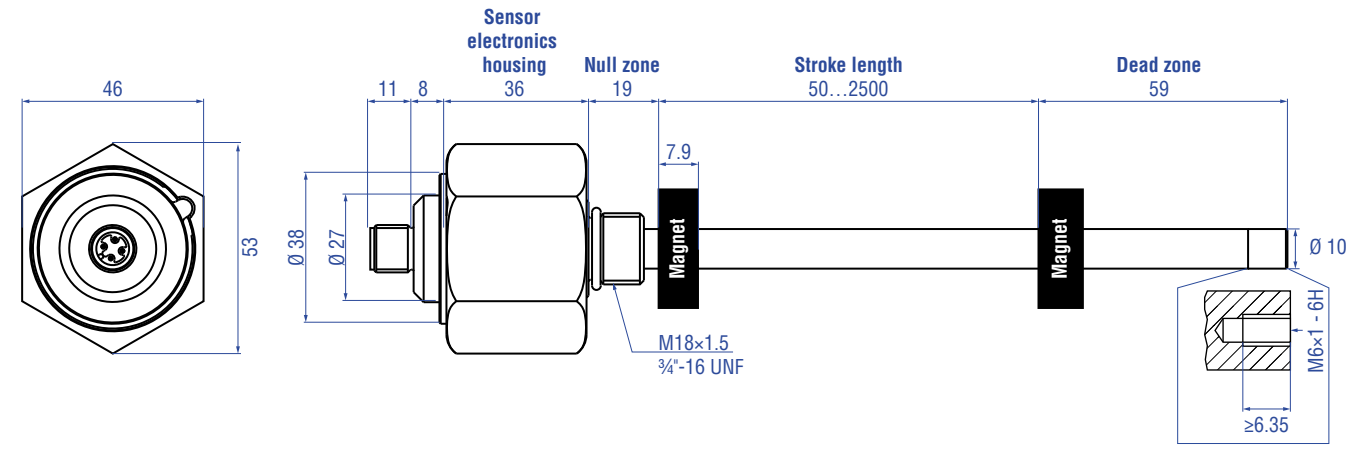

Threaded model with Ø 10 mm sensor rod and M8 male thread rod end (MHM-1-U-... / MHU-1-U-...)

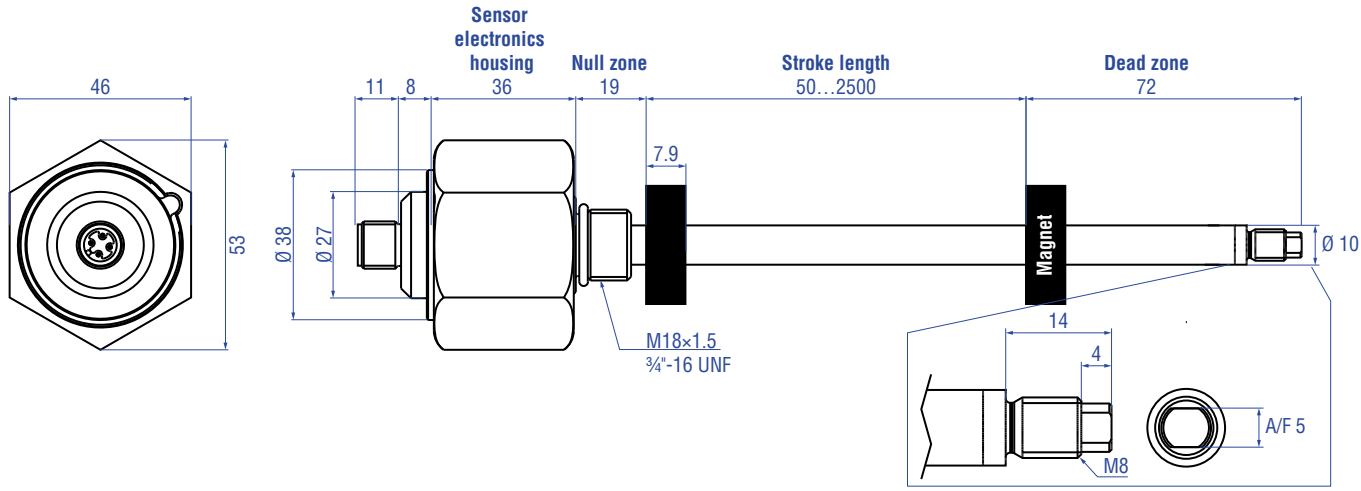

Fig. 9: MHRM threaded with ring magnet, part 2

Controlling design dimensions are in millimeters

MHRM THREADED – TECHNICAL DATA

Output			
Signal characteristic	Analog output restricted by noise or A/D converter of control unit		
Voltage	0.25…4.75 VDC; 0.5…4.5 VDC; 0.25…9.75 VDC; 4.75…0.25 VDC; 4.5…0.5 VDC; 9.75…0.25 VDC		
Current	4…20 mA; 20…4 mA		
Measured value	Position		
Measurement parameters			
Resolution	±0.1 mm typical		
Linearity	0050…0250 mm	0255…2000 mm	2005…2500 mm
	≤ ±0.1 mm	±0.04 % (F.S.)	≤ ±0.8 mm
Hysteresis	≤ ±0.2 mm		
Setpoint tolerance	±2 mm		
Operating conditions			
Operating temperature	–40…+105 °C		
Storage temperature	–25…+65 °C		
Humidity	90 % relative humidity, no condensation		
Ingress protection – M12 connector	IP67 / IP69K (correctly fitted)		
Ingress protection – Sensor housing	IP69K (with M12 connection fitted)		
Shock test (according to EN 50155)	According to EN 61373 Cat2 (Bogie) and Cat3 (Axle)		
Vibration test (according to EN 50155)	According to IEC 60068-2-64-Fn Cat3 (Axle)		
EMC test (according to EN 50155)	EN 50121-3-2 ISO 14982 Agricultural and forest machines EN 13309 Construction machines ISO 16750-2 Electromagnetic immunity according to EN 61000-6-2 Electromagnetic emission according to EN 61000-6-3 RF immunity 200 V/m per ISO 11452-2/-4		
PCB coating	According to EN 50155		
Pressure (according to DIN EN ISO 19879)*	Ø 7 mm sensor rod	Ø 10 mm sensor rod	
PN (nominal operating)	300 bar	350 bar	
P_{MAX} (max. overload)	400 bar	450 bar	
P_{STATIC} (proof pressure)	525 bar	625 bar	
Materials and dimensions			
Housing lid	Stainless steel 1.4305 (AISI 303)		
Sealing	O-ring NBR		
Sensor electronics housing	Stainless steel 1.4305 (AISI 303)		
Sensor rod – Ø 7 mm	Stainless steel 1.4301 (AISI 304)		
Sensor rod – Ø 10 mm	Stainless steel 1.4306 (AISI 304L)		
Stroke length	50…2500 mm		
Mechanical mounting			
Mounting instruction	Please consult the technical drawings		
Mounting position	Any		
Electrical installation			
Connector	1 × M12 male connector (4 pin)		
Operating voltage	12 / 24 VDC (8…32 VDC)		
	24 VDC supply	12 VDC supply	
Load (output mA)	R_L ≤ 500 Ω	R_L ≤ 250 Ω	
Load (output VDC)	R_L ≥ 10 kΩ	R_L ≥ 10 kΩ	
Inrush current	4.5 A / 2 ms	2.5 A / 2 ms	
Operating voltage ripple	1 $\%_{PP}$		
Power drain	≤ 1 W		
Over voltage protection (VDC-GND)	Up to +36 VDC		
Polarity protection (GND-VDC)	Up to –36 VDC		
Insulation resistance	R ≥ 10 MΩ @ 60 sec according to EN 50155		
Dielectric strength	708 VDC (DC ground to machine ground) according to EN 50155		

***/ According to calculations under use of the FKM guideline**

Cycles	**Ø 7 mm sensor rod**	**Ø 10 mm sensor rod**
Dynamic pressure: < 2 × 10^6 pressure cycles	300 bar	350 bar
Static pressure: < 2 × 10^4 pressure cycles	400 bar	450 bar
Proof pressure: Maximum 5 minutes testing time for cylinder pressure test	525 bar	625 bar

MECHANICAL INSTALLATION – MHRM THREADED

Hydraulics sealing
For sealing the flange contact surface, a sealing via an O-ring in the undercut is necessary.

O-ring size (included with threaded sensors):
For threaded flange (¾"-16 UNF):
O-ring 16.4 × 2.2 mm (part no. 560 315)
For threaded flange (M18×1.5):
15.3 × 2.2 mm (part no. 401 133)

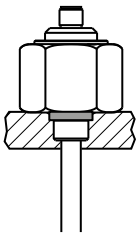

Fig. 10: Sealing via O-ring in the flange undercut

- Note the fastening torque of 50 Nm.
- The flange contact surface must be seated completely on the cylinder mounting surface.
- The cylinder manufacturer determines the pressure-resistant gasket (copper gasket, O-ring, etc.).
- The position magnet should not rub on the sensor rod.
- The peak pressure should not be exceeded.
- Protect the sensor rod against wear.

NOTICE

- The bore depth in piston:
  Null zone + Stroke length + Dead zone + > 3 mm
- Note the piston rod drilling:
  - Ø 7 mm rod: ≥ Ø 10 mm
  - Ø 10 mm rod: ≥ Ø 13 mm

Required for metric threads: Hole based on ISO 6149-1

Thread (d_1×P)	d_2	d_3	d_4	d_5	L_1	L_2	L_3	L_4	Z°
M18×1.5	55	13	24.5	19.8	2.4	28.5	2	14.5	15°

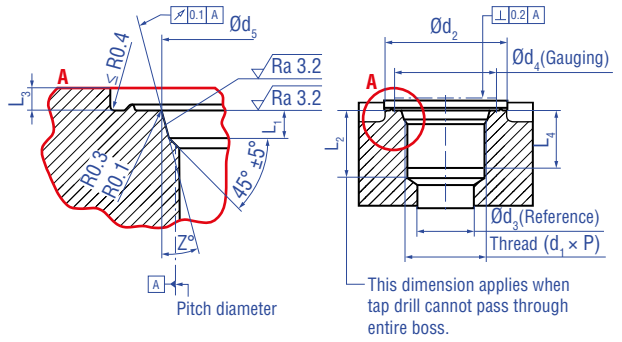

Fig. 11: Notice for threaded flange M18×1.5-6g based on DIN ISO 6149-1

Required for imperial threads: Hole based on ISO 11926-1

Thread	D2	D3	D4	T1	T2	T3	T4	r
¾"-16 UNF	22.3	20.6	55	2.4	2.5	14.3	17.5	15°

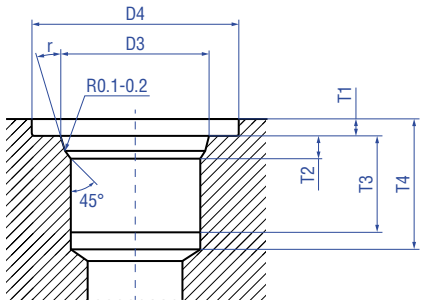

Fig. 12: Notice for imperial flange ¾"-16 UNF based on DIN ISO 11926-1

CONNECTOR WIRING

Connector wiring for M12 connector

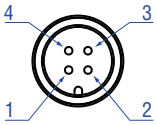

View on connector

Pin	L	Q
1	VDC	VDC
2	SIG_{GND}	SIG
3	VDC_{GND}	VDC_{GND}
4	SIG	SIG_{GND}

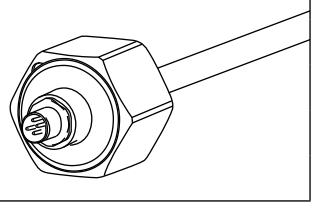

Fig. 13: Connecting wiring

Controlling design dimensions are in millimeters
Please refer to the installation manual for complete installation instructions!

MHRM THREADED – ORDER CODE

1	2	3	4	5	6	7	8	9	10	11	12	13	14
M	H								3				
a			b	c	d				e	f			g

a	Sensor model	
M	H	M	MH Railway with threaded flange M18×1.5
M	H	U	MH Railway with threaded flange ¾"-16 UNF

b	Sensor rod diameter
7	Ø 7 mm
1	Ø 10 mm

c	End plug
A	Flat
R	M6 thread female *(only for Ø 10 mm sensor rods)*
U	M8 thread male *(only for Ø 10 mm sensor rods)*

d	Stroke length			
X	X	X	X	0050…2500 mm *(in 5 mm steps)*

e	Operation voltage
3	+12 / 24 VDC (8…32 VDC)

f	Output		
Current			
A	0	1	4…20 mA
A	0	4	20…4 mA
Voltage			
V	1	1	0.25…4.75 VDC
V	1	2	0.50…4.5 VDC
V	1	3	4.75…0.25 VDC
V	1	4	4.5…0.5 VDC
V	2	3	0.25…9.75 VDC
V	2	5	9.75…0.25 VDC

g	Pin out for M12 connector
L	M12 connector (L: 1-3-2-4)
Q	M12 connector (Q: 1-3-4-2)

DELIVERY

Sensor, O-ring

Accessories have to be ordered separately

Manuals, Software & 3D Models available at:
www.mtssensors.com

FREQUENTLY ORDERED ACCESSORIES

Position magnets

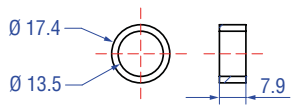

Ring magnet OD17.4
Part no. 401 032

Material: PA neobind
Weight: Ca. 5 g
Operating temperature: –40…+100 °C
Surface pressure [1]: Max. 20 N/mm²

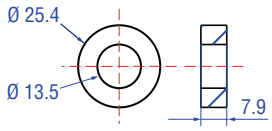

Ring magnet OD25.4
Part no. 400 533

Material: PA ferrite
Weight: Ca. 10 g
Operating temperature: –40…+100 °C
Surface pressure [1]: Max. 40 N/mm²

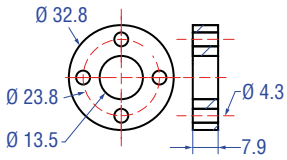

Ring magnet OD32.8
Part no. 201 542-2

Material: PA ferrite GF20
Weight: Ca. 14 g
Operating temperature: –40…+100 °C
Surface pressure [1]: Max. 40 N/mm²
Fastening torque for M4 screws: 1 Nm

Test kit

MH test kit (analog)
Part no. 280 618

Kit includes:
- 12 VDC battery charger with adapter (EU & UK)
- Cables with M12 connector
- Cable with pigtailed wires
- Carrying case

Please order test kit cables seperatly

Test kit cable

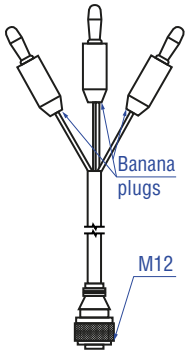

MHRM test cable with M12 connector – banana plugs (pin assignment L)
Part no. 254 827-1

see connector wiring on page 17

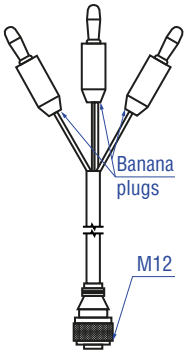

MHRM test cable with M12 connector – banana plugs (pin assignment Q)
Part no. 254 827-2

see connector wiring on page 17

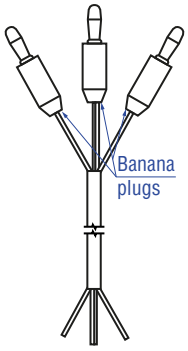

MHRM test cable with banana plug – pig tail
Part no. 254 828

see connector wiring on page 17

NOTICE

See page 13 for InterConnection plug order code

Controlling design dimensions are in millimeters

InterConnection plugs

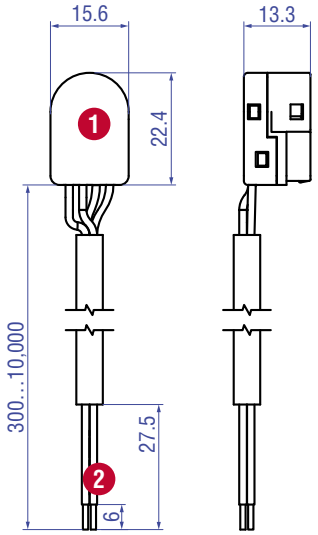

InterConnection plug shielded cable
Part no. 370 799 / 370 800

1 InterConnection plug
Material: PPE
(glass fiber reinforced plastic)

2 4 wires
0.50 mm² (AWG20) copper strands according to IEC 60228 – insulation polyolefin
Cable jacket: Black Elastomer compliant with fire performance for rolling stock equipment according to EN 50306-1

M12 flange

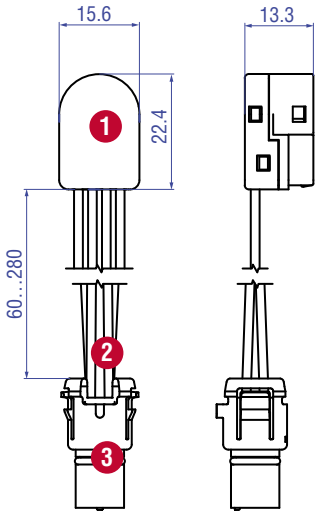

InterConnection plug M12
Part no. 370 715

1 InterConnection plug
Material: PPE
(glass fiber reinforced plastic)

2 4 Wires
4 × 0.22 mm² (AWG24) – PE insulation according to ISO 6722-C

3 M12 plug
Material: PA reinforced
(with O-ring 7 × 1.35 mm NBR70)
Pins: Brass with gold plating

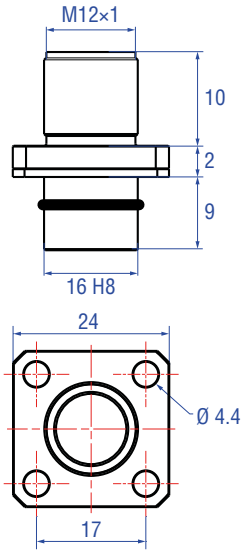

M12 flange
Part no. 253 769

Material flange: Brass
nickel-plated
Material O-ring: 13×1.6 NBR70

Controlling design dimensions are in millimeters

CONNECTOR WIRING

Connector wiring for test kit cable 254 827-1 (pin assignment L)

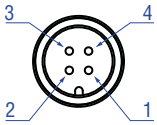

View on connector

Pin	Function	Wire color	Banana plug color
1	VDC	BN	BN
2	SIG GND	WH	WH
3	VDC GND	BU	
4	SIG	BK	GN

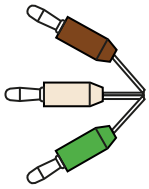

Connector wiring for test kit cable 254 827-2 (pin assignment Q)

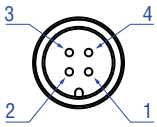

View on connector

Pin	Function	Wire color	Banana plug color
1	VDC	BN	BN
2	SIG	WH	GN
3	VDC GND	BU	WH
4	SIG GND	BK	

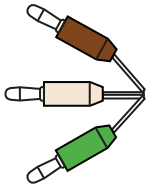

Connector wiring for test kit cable 254 828

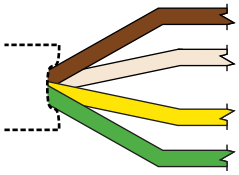

Wire color	Function	Banana plug color
BN	VDC	BN
WH	SIG	GN
YE	VDC GND	WH
GN	SIG GND	

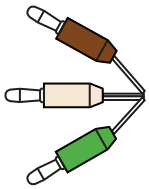

Fig. 14: Connector wiring

NOTICE

* test cables to be ordered separately

MECHANICAL INSTALLATION – POSITION MAGNET

For cylinder installation:

- Note the piston rod drilling:
  - Ø 7 mm rod: ≥ Ø 10 mm
  - Ø 10 mm rod: ≥ Ø 13 mm

  The bore depth in piston:
  Null zone + Stroke length + Dead zone + > 3 mm

Magnet installation for In-Cylinder applications

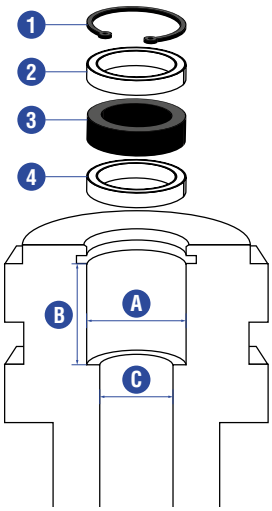

1	Circlip		
2	Non-magnetic spacer		
3	Position magnet		
4	Non-magnetic spacer (≥ 5 mm)		
	Position magnet (Part no.)		
	401 032	**400 533**	**201 542-2**
A	> 17.4 mm	> 25.4 mm	> 32.8 mm
B	≥ 18 mm	≥ 18 mm	≥ 18 mm
C	Rod Ø 7 mm ➔	Piston rod drilling ≥ Ø 10 mm	
	Rod Ø 10 mm ➔	Piston rod drilling ≥ Ø 13 mm	

Fig. 15: Dimensions for magnet mounting

UNITED STATES
MTS Systems Corporation
Sensors Division
3001 Sheldon Drive
Cary, N.C. 27513
Phone: +1 919 677-0100
E-mail: info.us@mtssensors.com

GERMANY
MTS Sensor Technologie
GmbH & Co. KG
Auf dem Schüffel 9
58513 Lüdenscheid
Phone: +49 2351 9587-0
E-mail: info.de@mtssensors.com

ITALY
Branch Office
Phone: +39 030 988 3819
E-mail: info.it@mtssensors.com

FRANCE
Branch Office
Phone: +33 1 58 4390-28
E-mail: info.fr@mtssensors.com

GREAT BRITAIN
Branch Office
Phone: +44 79 44 15 03 00
E-mail: info.uk@mtssensors.com

CHINA
Branch Office
Phone: +86 21 6485 5800
E-mail: info.cn@mtssensors.com

JAPAN
Branch Office
Phone: +81 42 707 7710
E-mail: info.jp@mtssensors.com

www.mtssensors.com

Document Part Number:
551802 Revision C (EN) 03/2018

ISO 9001 CERTIFIED

Reg.-No. 003095-QM08