Operating Manual

R60723.0002 - Index 7

Multifunctional Display 571T

HTL-pulse counter, frequency display (tachometer), timer (stopwatch) and processing time or position display with touchscreen and graphic display

Product features:

- Multifunctional unit with several operating modes, e. g. speed or position indicator, process meter, counter, timer or stopwatch
- Universal inputs (HTL/RS422) for encoders / sensors with NPN / PNP / NAMUR characteristic
- Bright and high-contrast display with event controlled color variations
- Emulation of a 7-segment display inclusively icons and units
- Intuitive and easy parameterization by plain text and touchscreen
- 5 / 24 V auxiliary output for encoder supply
- Input frequencies up to 1 MHz
- Linearization with 24 interpolation points
- Numerous features, e. g. scaling, filtering, start-up suppression
- 96 x 48 mm (3.78 x 1.89 inch) norm panel housing and IP65 protection

Order code 6.571T . 01X(a) . X(b)X(c)X(d)

a Relay outputs
0 = 2 relay outputs
2 = without output

b Power supply
3 = 18 ... 30 V DC
E = 18 ... 30 V DC + 115 ... 230 V AC

c Further options
0 = HTL count inputs (standard)
A = RS422 / HTL differential / HTL count inputs (option)

d Electrical outputs
0 = none
1 = RS232, 4 switching outputs
2 = RS232, 4 switching outputs, analog output
3 = RS485, 4 switching outputs

Delivery specification	*Stock types*
· Display 571T	6.571T.012.301
· Gasket	6.571T.012.302
· Mounting kit	6.571T.010.302
· Manual German/English	6.571T.010.E02

Version:	Description
571T_01a_oi/ Sep-18	First Version
571T _01d_oi/ Okt-16	Revised first Version
571T _02a_oi/ Nov-16	Second Version
571T _02c_oi/ Jan-17	Revised Version
571T _03a_oi/ Apr-17	Revised Version
571T – RS485/ May-17	Revised Version
571T_04a_oi/ Sep-17	Extension 571T, software customization
571T_05a_oi/ April-18	Extension of serial interface with Modbus protocol
571T_05c_oi/ July-18	With Modbus description

Legal notices:
All contents included in this manual are protected by the terms of use and copyrights of the Kübler Group, Fritz Kübler GmbH. Any reproduction, modification, usage or publication in other electronic and printed media as well as in the internet requires prior written authorization by the Kübler Group, Fritz Kübler GmbH.

German is the original version.

Table of Contents

1 Safety Instructions and Responsibility 4
1.1 General Safety Instructions 4
1.2 Use according to the intended purpose 4
1.3 Installation 5
1.4 Cleaning, Maintenance and Service Notes 5
2 Introduction 6
2.1 Operation mode 6
2.2 Function diagram 7
3 Electrical Connections 8
3.1 DC Power Supply 8
3.2 Auxiliary Voltage Output 8
3.3 6.571T.XXX.X0X: Incremental Input A, B 9
3.4 6.571T.XXX.XAX: Incremental Input A, /A, B, /B 10
3.5 Control Inputs 11
3.6 Analog Output (Option) 11
3.7 Serial interface RS232 or RS485 (Option) 12
3.8 Control-Output (Option) 13
3.9 AC Power supply (Option 115 ... 230 V AC) 13
3.10 Relay-Output (Option) 13
4 Display and touch screen 14
4.1 Screen structure for parametrization 14
4.2 Screen structure in operation 15
5 Parameter / Overview-Menu Structure 16
5.1 General Menu 18
5.2 Mode Speed 21
5.3 Mode Process Time 23
5.4 Mode Timer 25
5.5 Mode Counter 26
5.6 Mode Velocity 27
5.7 Preselection Values 29
5.8 Preselection 1 Menu 30
5.9 Preselection 2 Menu 33
5.10 Preselection 3 Menu 34
5.11 Preselection 4 Menu 35
5.12 Serial Menu 36
5.13 Analog Menu 38
5.14 Command Menu 39
5.15 Display Menu 41
5.16 Linearization Menu 42
6 Appendix 43
6.1 Data readout via serial interface 43
6.2 Modbus RTU Interface 44
6.2.1 Parameter setting 44
6.2.2 Modbus Communication 45
6.2.3 Diagnostics 46
6.3 Parameter / serial codes 47
6.4 Linearization 52
6.5 Dimensions 54
6.6 Technical specifications 55

1 Safety Instructions and Responsibility

1.1 General Safety Instructions

This operation manual is a significant component of the unit and includes important rules and hints about the installation, function and usage. Non-observance can result in damage and/or impairment of the functions to the unit or the machine or even in injury to persons using the equipment!

Please read the following instructions carefully before operating the device and observe all safety and warning instructions! Keep the manual for later use.

A pertinent qualification of the respective staff is a fundamental requirement in order to use these manual. The unit must be installed, connected and put into operation by a qualified electrician.

Liability exclusion: The manufacturer is not liable for personal injury and/or damage to property and for consequential damage, due to incorrect handling, installation and operation. Further claims, due to errors in the operation manual as well as misinterpretations are excluded from liability.

In addition the manufacturer reserves the right to modify the hardware, software or operation manual at any time and without prior notice. Therefore, there might be minor differences between the unit and the descriptions in operation manual.

The raiser respectively positioner is exclusively responsible for the safety of the system and equipment where the unit will be integrated.

During installation or maintenance all general and also all country- and application-specific safety rules and standards must be observed.

If the device is used in processes, where a failure or faulty operation could damage the system or injure persons, appropriate precautions to avoid such consequences must be taken.

1.2 Use according to the intended purpose

The unit is intended exclusively for use in industrial machines, constructions and systems. Non-conforming usage does not correspond to the provisions and lies within the sole responsibility of the user. The manufacturer is not liable for damages which have arisen through unsuitable and improper use. Please note that device may only be installed in proper form and used in a technically perfect condition (in accordance to the Technical Specifications). The device is not suitable for operation in explosion-proof areas or areas which are excluded by the EN 61010-1 standard.

1.3 Installation

The device is only allowed to be installed and operated within the permissible temperature range. Please ensure an adequate ventilation and avoid all direct contact between the device and hot or aggressive gases and liquids.

Before installation or maintenance, the unit must be disconnected from all voltage-sources. Further it must be ensured that no danger can arise by touching the disconnected voltage-sources.

Devices which are supplied by AC-voltages must be connected exclusively by switches, respectively circuit-breakers with the low voltage network. The switch or circuit-breaker must be placed as near as possible to the device and further indicated as separator.

Incoming as well as outgoing wires and wires for extra low voltages (ELV) must be separated from dangerous electrical cables (SELV circuits) by using a double resp. increased isolation.

All selected wires and isolations must be conform to the provided voltage- and temperature-ranges. Further all country- and application-specific standards, which are relevant for structure, form and quality of the wires, must be ensured. Indications about the permissible wire cross-sections for wiring are described in the Technical Specifications.

Before first start-up it must be ensured that all connections and wires are firmly seated and secured in the screw terminals. All (inclusively unused) terminals must be fastened by turning the relevant screws clockwise up to the stop.

Overvoltages at the connections must be limited to values in accordance to the overvoltage category II.

For placement, wiring, environmental conditions as well as shielding and earthing/grounding of the supply lines the general standards of industrial automation industry and the specific shielding instructions of the manufacturer are valid. Please find all respective hints and rules on www.kuebler.com/download.html --> “[General EMC Rules for Wiring, Screening and Earthing]”.

1.4 Cleaning, Maintenance and Service Notes

To clean the front of the unit please use only a slightly damp (not wet!), soft cloth. For the rear no cleaning is necessary. For an unscheduled, individual cleaning of the rear the maintenance staff or assembler is self-responsible.

During normal operation no maintenance is necessary. In case of unexpected problems, failures or malfunctions the device must be shipped for back to the manufacturer for checking, adjustment and reparation (if necessary). Unauthorized opening and repairing can have negative effects or failures to the protection-measures of the unit.

2 Introduction

This series of display unit is suitable for HTL impulse signals and panel mounting. It is very versatile in use, due to the intuitive handling and the extensive range of functions and options.

2.1 Operation mode

All functions are can be configured in the parameter menu.
The device can be set to one of the following operation modes:

- SPEED (only input A is used)
  - Tachometers / speed indicator
  - Measurement of frequency / RMP indicator
  - Monitoring functions for speed and standstill
- PROCESS TIME (only input A is used)
  - Processing time indicator (reciprocal speed)
  - Baking time indicator
  - Flow time indicator
- TIMER (only Input A or Input B are used, depending on the parameter setting)
  - Operation as stopwatch (start- / stop function can be freely parameterized)
  - Counter for operation hours
  - Period measurement
- COUNTER (input A and input B are used)
  - Pulse counter / sum or differential counter
  - Up- or down counter
  - Position indicator
  - Quadrature counter
  - Batch counter
- VELOCITY (input A operates as a start input and input B operates as a stop input)
  - Runtime measurement as speed indicator.

2.2 Function diagram

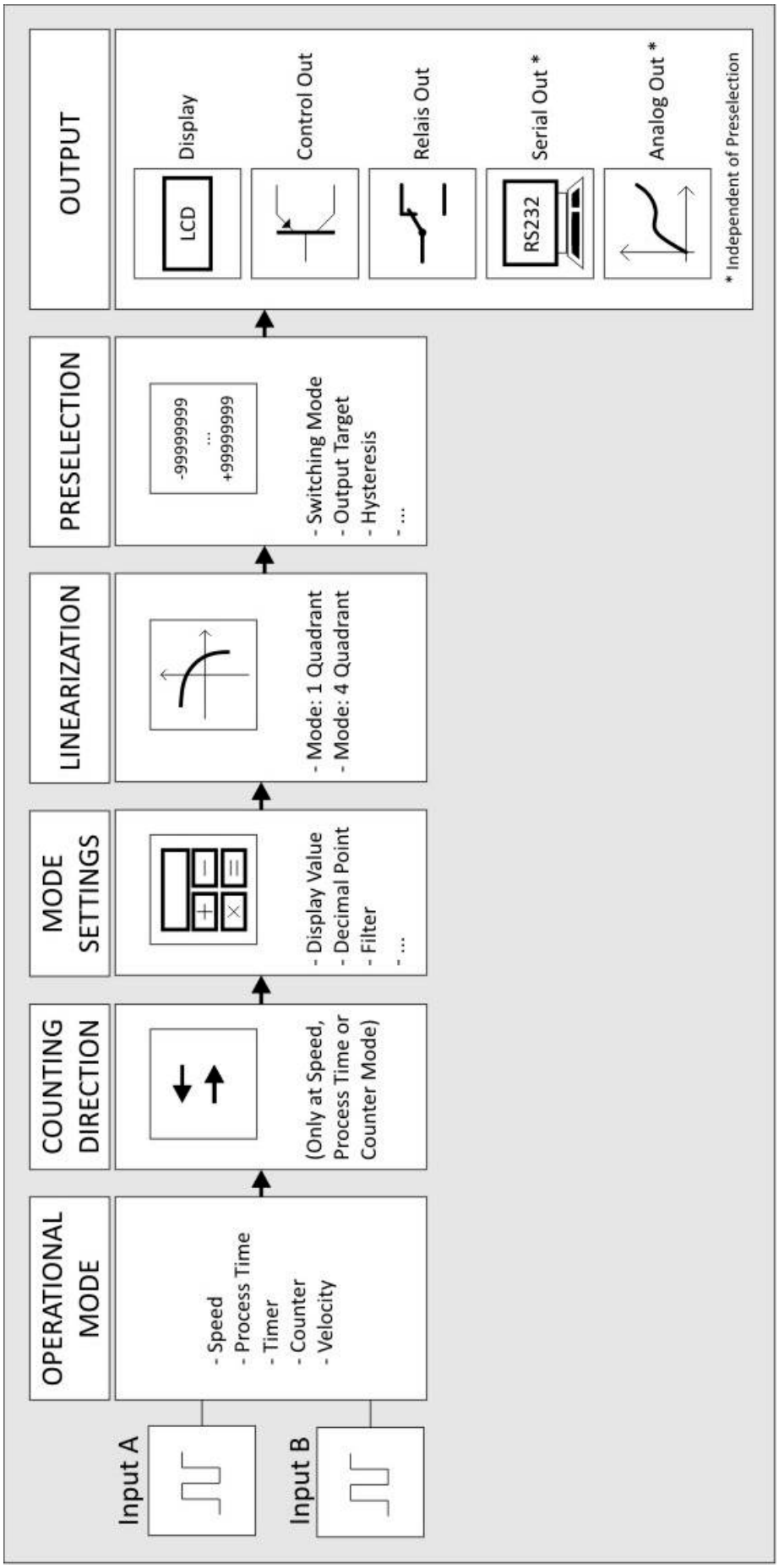

3 Electrical Connections

The terminal screws should be tightened with a slotted screwdriver (blade width 2mm).

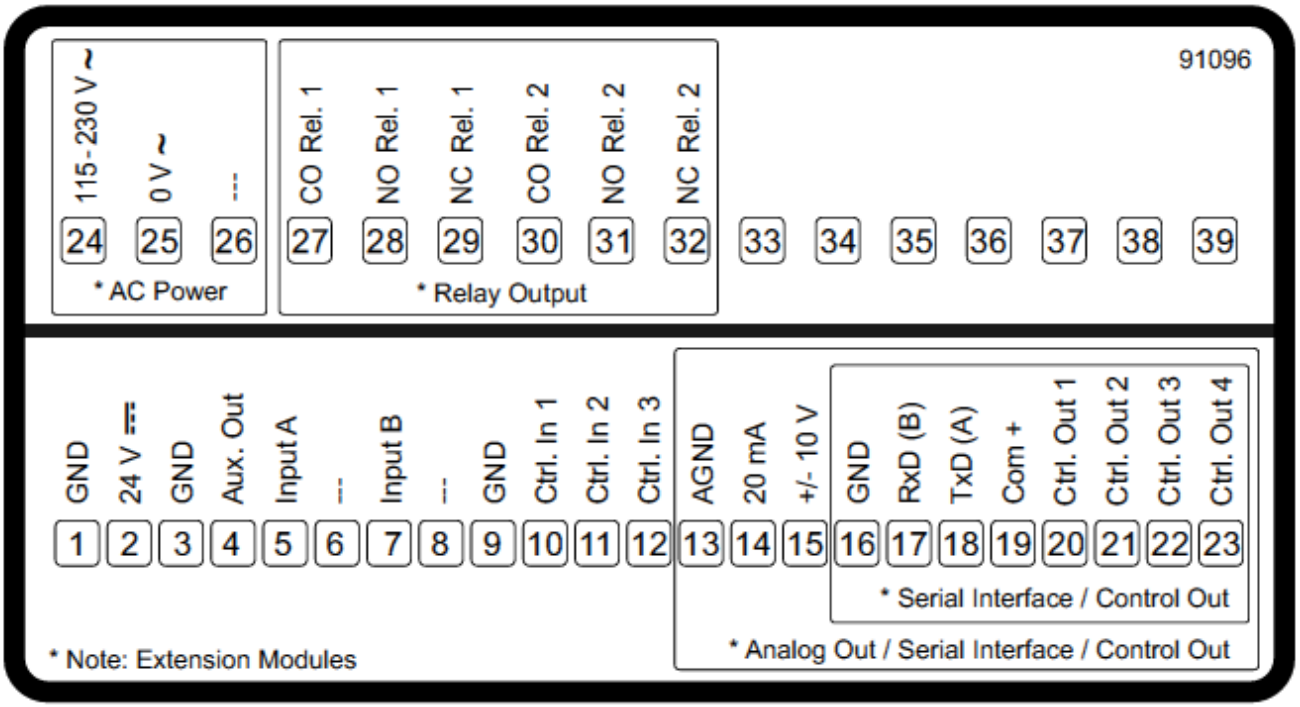

3.1 DC Power Supply

The unit accepts DC supply from 18 to 30 V at the terminals 1 and 2. The power consumption depends on the level of the supply voltage with approx. 100 mA and the additional current required at the Auxiliary Voltage Output.

All GND terminals are internally interconnected.

3.2 Auxiliary Voltage Output

Terminal 3 and 4 provide an auxiliary output for supply of sensors and encoders.
The output voltage depends on the power supply.

DC version	AC version
The encoder voltage is approx. 1 V lower than the power supply voltage at terminal 1 and 2 and should be loaded with max. 250 mA.	The encoder voltage is 24 VDC (± 15%) and should be loaded with max. 150 mA up to 45 degrees Celsius. At higher temperature the maximum output current is reduced to 80 mA.

At 6.571T.XXX.XAX devices, the auxiliary voltages output is switchable from 24 VDC to 5 VDC.

3.3 6.571T.XXX.X0X: Incremental Input A, B

The unit provides two inputs at terminal 5 and 7 for HTL signals.
The characteristics of the incremental input (PNP, NPN, Namur or Tri-State) can be set in the GENERAL MENU.

Wiring of the incremental inputs:

PNP

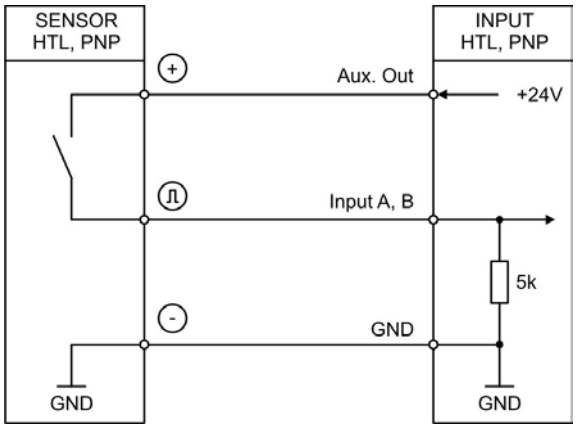

NPN

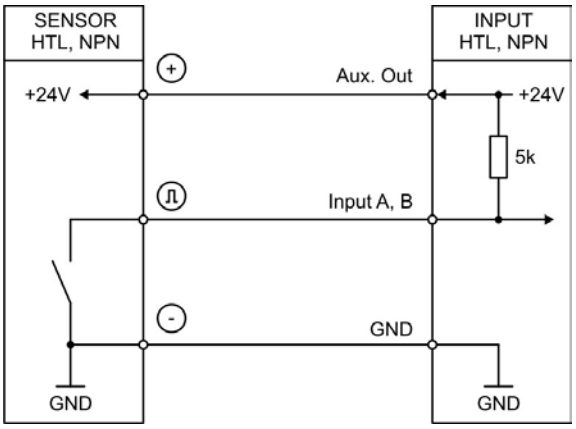

Namur

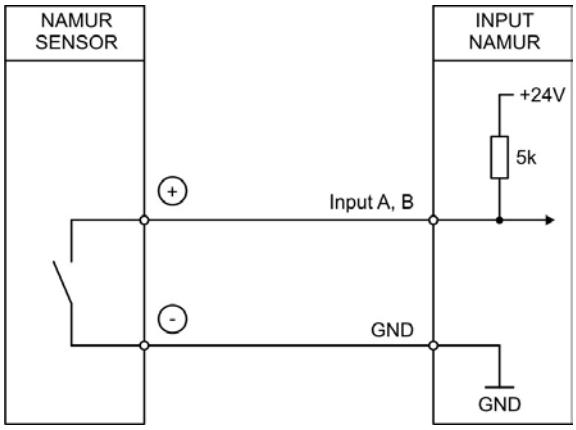

Tri-State

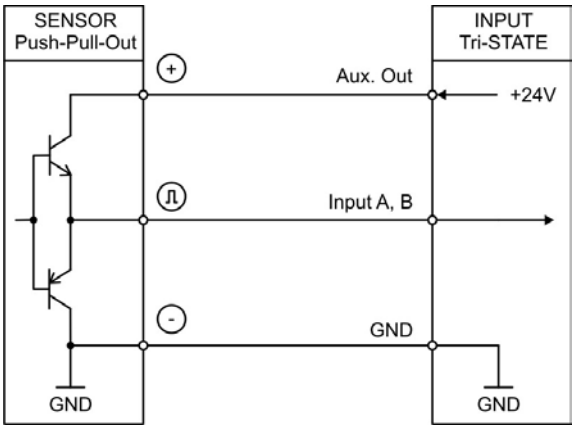

Unconnected PNP inputs are always “LOW” and unconnected NPN inputs are always “HIGH”.
All inputs are designed to receive impulses from electrical impulse sources.

Notice for mechanical switching contacts:
When exceptionally mechanical contacts are used, please connect an external capacitor between GND (-) and the corresponding input (+). A capacity of 10 µF will reduce the input frequency to 20 Hz and miscounting due to contact bouncing will be eliminated.

3.4 6.571T.XXX.XAX: Incremental Input A, /A, B, /B

The unit provides two pulse inputs at terminal 5, 6, 7 and 8 for HTL/HTL-Diff./RS422 signals.
The characteristics of the incremental input can be set in the GENERAL MENU.

Wiring of the incremental inputs:

RS422

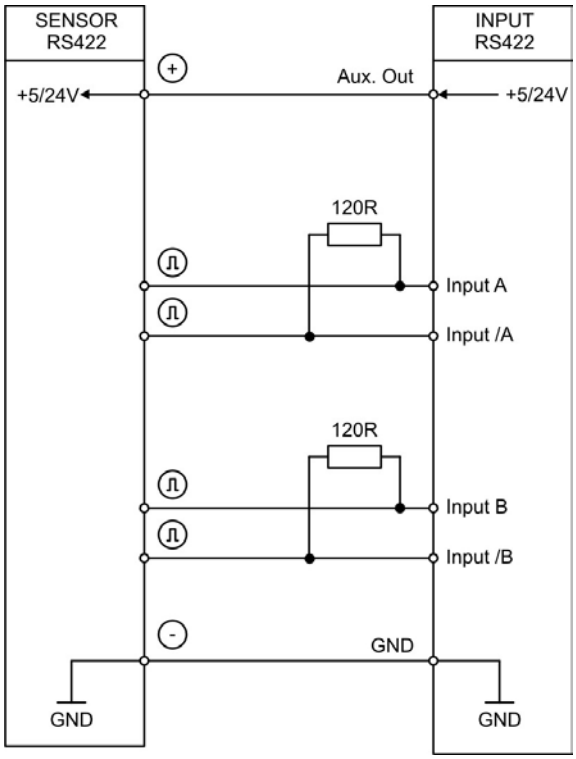

HTL DIFFERENTIAL

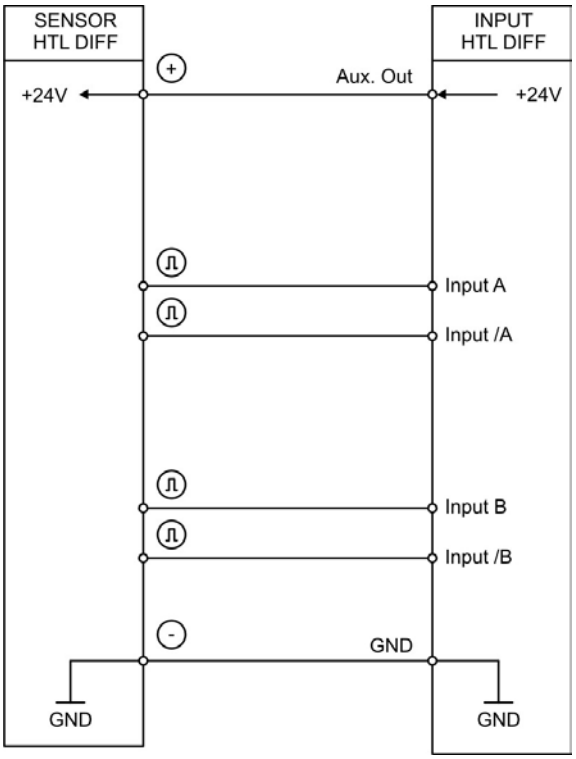

HTL PNP, single ended

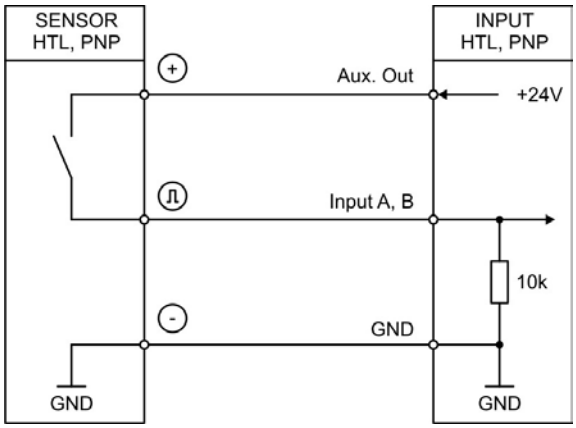

HTL NPN, single ended

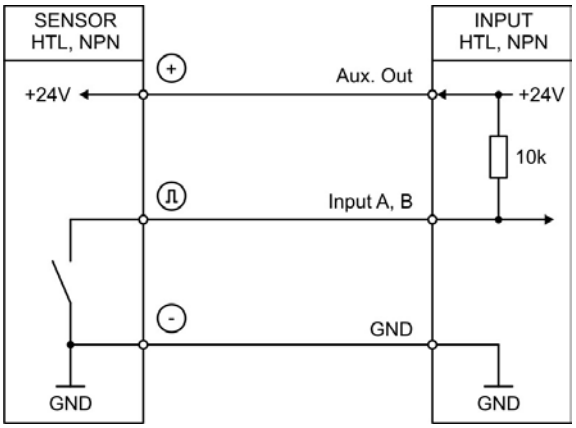

Unconnected PNP inputs are always “LOW” and unconnected NPN inputs are always “HIGH”.
All inputs are designed to receive impulses from electrical impulse sources.

3.5 Control Inputs

The three control inputs at terminal 10, 11 and 12 have HTL PNP characteristics.

In the COMMAND MENU the programmable functions for the control inputs can be assigned. Available functions are: reset the display value, display switching, locking the touch screen or release the lock function of the control or relay outputs.

Wiring of the control inputs:

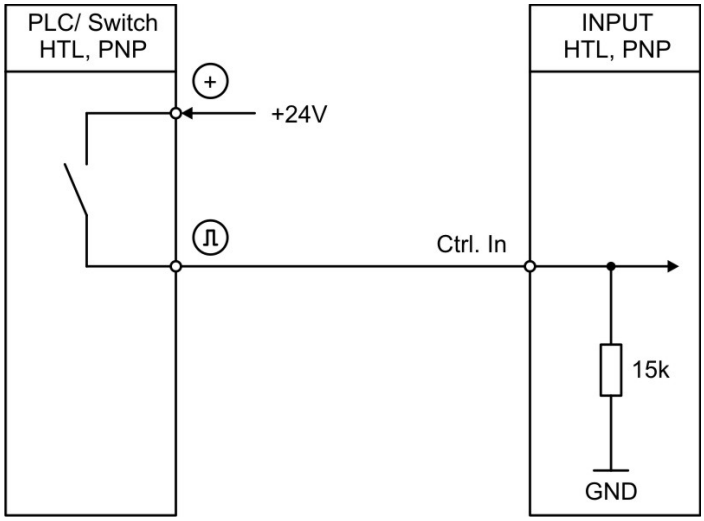

Unconnected control inputs are always “LOW”.
All inputs are designed to receive impulses from an electronic impulse source.

Notice for mechanical switching contacts:
When exceptionally mechanical contacts are used, please connect an external capacitor between GND (-) and the corresponding input (+). A capacity of 10 µF will reduce the input frequency to 20 Hz and miscounting due to contact bouncing will be eliminated.

3.6 Analog Output (Option)

A 16 bit analog output is available at terminal 13 and 14 / 15
This output can be configured and scaled in the ANALOG MENU.

The following configuration is possible:

- Voltage output: -10 ... +10 V
- Current output: 0 ... 20 mA
- Current output: 4 ... 20 mA

The analog output is proportional to the display value and is referenced to potential AGND.
AGND and GND are internally interconnected.

Important:
A parallel operation with voltage and current output at the analog output is not allowed.

3.7 Serial interface RS232 or RS485 (Option)

A serial interface (RS232 or RS485) is available at terminal 16, 17 and 18.
This interface can be configured in the SERIAL MENU.

The serial interface RS232 or RS485 can be used:

- for easy setup and commissioning of the units
- to modify settings and parameters during operation
- to read out internal states and actual measuring values by PC or PLC

The following drawing shows the connection to a PC by using a standard Sub-D-9 connector:

Connection of the RS232 interface:

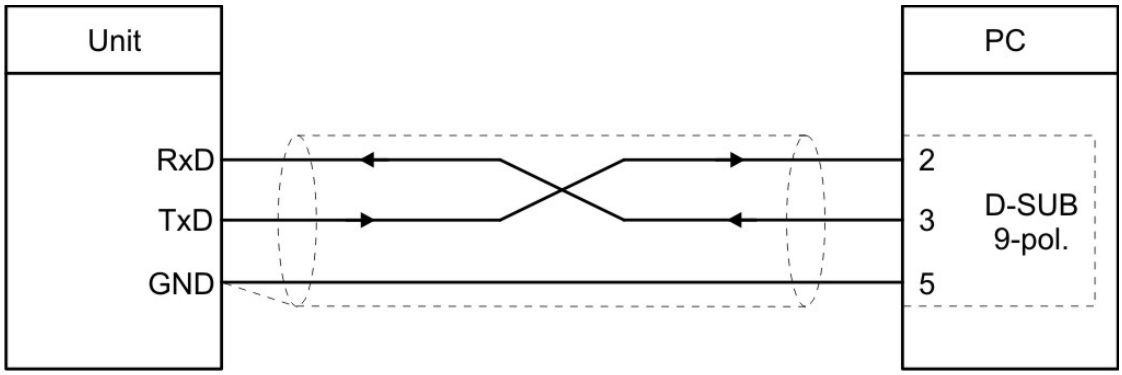

Connection of the RS485 interface:

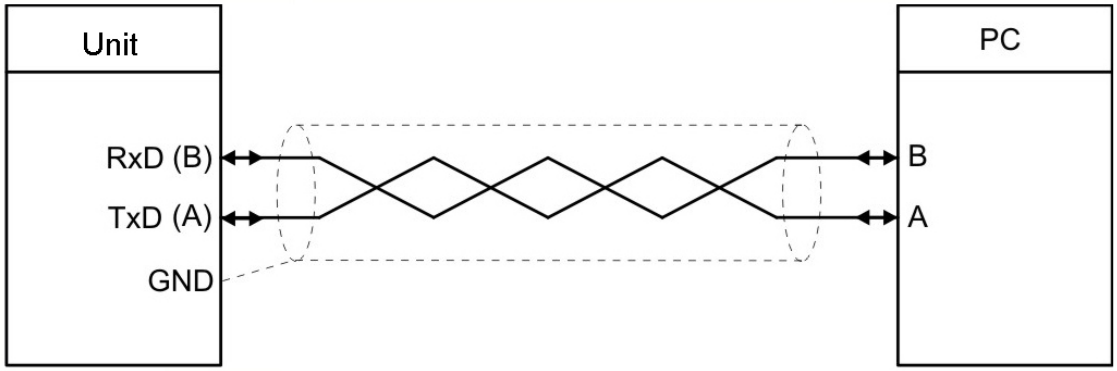

3.8 Control-Output (Option)

Four control outputs are available at terminal 20, 21, 22 and 23.
Switching conditions can be set in the PRESELECTION MENU.
The output Ctrl. Out1 – 4 are fast PNP outputs with a switching capability of 5 – 30 Volt / 200 mA per channel. The switching states is displayed (display with unit and status bar) as C1 ... C4.
The switching voltage of the outputs must be applied to input terminal 19 (COM+).
In case of switching inductive loads it is advisable to use external filtering of the coils.

Wiring of the control-outputs:

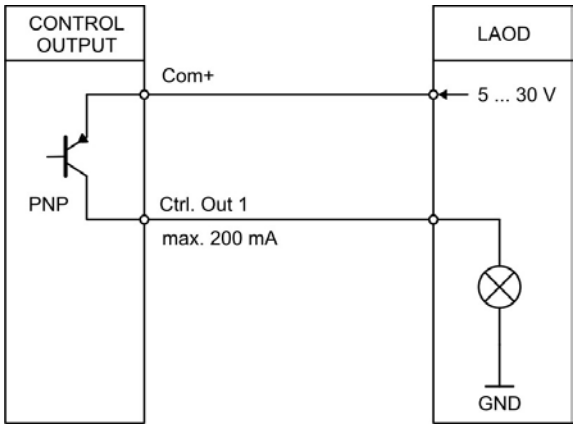

3.9 AC Power supply (Option 115 ... 230 V AC)

The unit accepts AC supply from 115 ... 230 V at the terminals 24 and 25. The power consumption depends on the level of the supply voltage with approx. 3 VA and the additional current required at the Auxiliary Voltage Output. Devices with option AC can also be supplied with a DC voltage between 18 and 30 VDC at terminals 1 and 2.

3.10 Relay-Output (Option)

Two relay outputs with potential-free changeover contacts are available at terminal 27, 28, 29, 30, 31, 32. Switching conditions can be set in the PRESELECTION MENU. The switching states are displayed (display with unit and status bar) as K1 and K2.

AC-switching capacity max. 250 VAC/ max. 3 A / max. 750 VA
DC-switching capacity max. 150 VDC/ max. 2 A / max. 50 W

Wiring of the relay outputs:

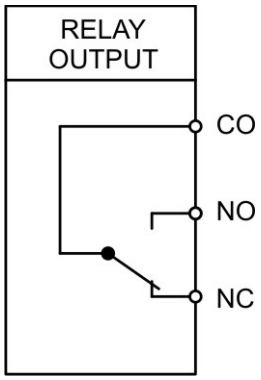

4 Display and touch screen

4.1 Screen structure for parametrization

The parameter menus and the parameters are described in chapter 5.

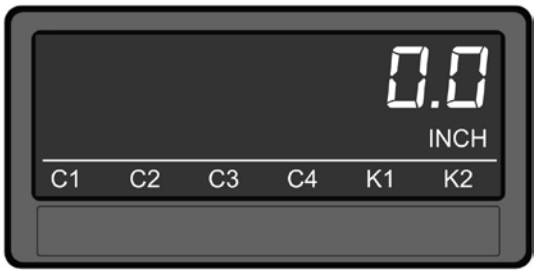

Start setup procedure:

To edit the parameters, press the touchscreen for 3 seconds.

Menu selection:

Select the parameter menu via arrow buttons and confirm with “OK”.

The menu selection can be terminated with „C“.

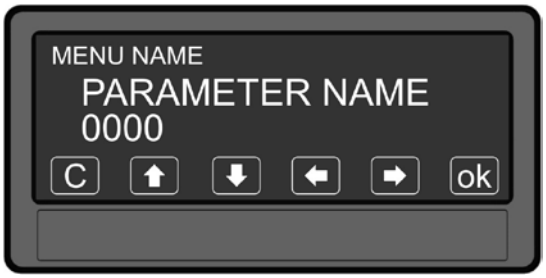

Parameter selection:

Select the parameter via arrow buttons and confirm with „OK“.

The parameter selection can be terminated with „C“.

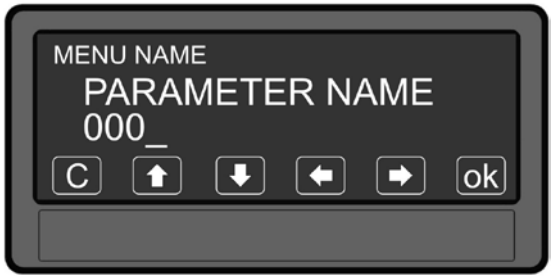

Parameter editing:

Edit the parameter via arrow button up and down, shift cursor via left and right and save with „OK“.

The parameter editing can be terminated with „C“.

Parameter changes becomes active only after closing the menu selection

4.2 Screen structure in operation

The following screens are available during operation. Depending on the device version and the selected operation mode, not all displays will be shown.

Display with unit and status bar

To switch to the next display, press the touch screen.

Control - or Relay status are only shown with Option Analog-, Control-, Relay-Output.

Display counter und batch counter

To switch to the next display, press the top of the screen.

This is only possible in operation mode COUNTER - BATCH MODE.

Display with command keys

To switch to the next display, press the top of the screen.

This is only possible in operation mode TIMER or COUNTER.

Display for quick start for enter preselection values (PRESELECT VALUES)

To switch to the next display, press the top of the screen or the “skip” button.

This is only possible with Option Analog-, Control-, Relay-Output.

Display with minimum and maximum value

To switch to the next display, press the top of the screen or the “skip” button.

5 Parameter / Overview-Menu Structure

This section provides an overview of the menus and their parameters. The menu names are printed bold and the associated parameters are listed under the menu name. Depending on the device version and the selected operation mode, only the necessary menus / parameters are shown.

Menu / Parameter
GENERAL MENU
OPERATIONAL MODE ENCODER PROPERTIES ENCODER SUPPLY COUNTING DIRECTION SCALE UNITS LINEARIZATION MODE PIN PRESELECTION PIN PARAMETER BACK UP MEMORY FACTORY SETTINGS

Menu / Parameter
MODE SPEED
DISPLAY VALUE BASE FREQUENCY DECIMAL POINT SAMPLING TIME WAIT TIME STANDSTILL TIME AVERAGE FILTER FOR/REV DETECTION
MODE PROCESS TIME
DISPLAY FORMAT DISPLAY VALUE BASE FREQUENCY SAMPLING TIME WAIT TIME STANDSTILL TIME AVERAGE FILTER
MODE TIMER
TIME BASE START / STOP AUTO RESET LATCH FUNCTION SET VALUE INC / DEC MODE
MODE COUNTER
COUNT MODE FACTOR SET VALUE DECIMALPOINT BATCH MODE BATCH SET VALUE
MODE VELOCITY
START / STOP DISPLAY VALUE BASE TIME DECIMALPOINT WAIT TIME STANDSTILL TIME

Menu / Parameter
PRESELECTION VALUES
PRESELECTION 1 PRESELECTION 2 PRESELECTION 3 PRESELECTION 4
PRESELECTION 1 MENU
MODE 1 HYSTERESIS 1 PULSE TIME 1 OUTPUT TARGET 1 OUTPUT POLARITY 1 OUTPUT LOCK 1 START UP DELAY 1 EVENT COLOR 1
PRESELECTION 2 MENU
MODE 2 HYSTERESIS 2 PULSE TIME 2 OUTPUT TARGET 2 OUTPUT POLARITY 2 OUTPUT LOCK 2 START UP DELAY 2 EVENT COLOR 2
PRESELECTION 3 MENU
MODE 3 HYSTERESIS 3 PULSE TIME 3 OUTPUT TARGET 3 OUTPUT POLARITY 3 OUTPUT LOCK 3 START UP DELAY 3 EVENT COLOR 3
PRESELECTION 4 MENU
MODE 4 HYSTERESIS 4 PULSE TIME 4 OUTPUT TARGET 4 OUTPUT POLARITY 4 OUTPUT LOCK 4 START UP DELAY 4 EVENT COLOR 4

Menu / Parameter
SERIAL MENU
UNIT NUMBER SERIAL BAUD RATE SERIAL FORMAT SERIAL INIT SERIAL PROTOCOL SERIAL TIMER SERIAL VALUE MODBUS
ANALOG MENU
ANALOG FORMAT ANALOG START ANALOG END ANALOG GAIN ANALOG OFFSET
COMMAND MENU
INPUT 1 ACTION INPUT 1 CONFIG INPUT 2 ACTION INPUT 2 CONFIG INPUT 3 ACTION INPUT 3 CONFIG
DISPLAY MENU
COLOR BRIGHTNESS CONTRAST SCREEN SAVER UP-DATE-TIME FONT
LINEARISATION MENU
P1(X) P1(Y) P2(X) P2(Y) ... ... P23(X) P23(Y) P24(X) P24(Y)

5.1 General Menu

OPERATIONAL MODE
This parameter specifies the selected measuring function.

	0	SPEED	Speed indicator (RPM), tachometer or frequency counter
	1	PROCESS TIME	Operation as baking time or processing time indicator (reciprocal speed)
	2	TIMER	Operation as stopwatch
	3	COUNTER	Operation as position indicator, event-, sum-, differential- or up-down counter
	4	VELOCITY	Runtime measurement as speed indicator

ENCODER PROPERTIES (for 6.571T.XXX.X0X)
This parameter determines the characteristics of the pulse input for 6.571T.XXX.X0X.

	0	PNP	PNP (switch to +)
	1	NPN	NPN (switch to -)
	2	NAMUR	Connect sensor (–) to GND and sensor (+) to input (A or B)
	3	TRI-STATE	Tri-State for push-pull encoders/ sensors

ENCODER PROPERTIES (for 6.571T.XXX.XAX)
This parameter determines the characteristics of the pulse input for 6.571T.XXX.XAX.

	0	RS422	RS422 standard
	1	HTL DIFFERENTIAL	HTL differential
	2	HTL PNP	HTL PNP single ended (switch to +)
	3	HTL NPN	HTL NPN single ended (switch to -)

ENCODER SUPPLY (only for 6.571T.XXX.XAX available)
This parameter defines the voltage of the auxiliary supply output (Aux-Out).

	0	24VDC SUPPLY	24 VDC encoder supply
	1	5VDC SUPPLY	5 VDC encoder supply

COUNTING DIRECTION
This parameter determines the direction of counting (only in mode COUNTER).

	0	FORWARD	forward
	1	REVERSE	reverse

Continuation „General Menu“:

SCALE UNITS

This parameter defines the required engineering unit. This parameter does not affect the calculation of the display value. The number of decimal places must be defined with the parameter DECIMAL POINT.

0	Hz	Default
1	kHz	
2	m/s	
3	m/min	
4	km/h	
5	mph	
6	1/min	
7	RPM	
8	1/sec	
9	RPS	
10	Stk/h	
11	pcs/h	
12	mm	
13	m	
14	inch	
15	feet	
16	Stueck	
17	pcs	
18	sec	
19	min	
20	Min:Sec	
21	H:M:S	
22	%	
23	l/min	
24	gal/min	
25	ml/min	
26	gr/min	
27	inch/min	
28	H:M	
29	Edit Unit	A customized unit with up to 16 digits can be edited using this parameter. Pressing the "OK" button opens the Edit Unit Menu. A unit can be created using the arrow keys (by pressing and holding the arrow keys the characters scroll fast). The “OK” button saves the Edit Unit Menu. The “C” button closes the Edit Unit Menu.

	!	"	#	$	%	&	'	(	)	*	+	,	-	.	/
0	1	2	3	4	5	6	7	8	9	:	;	<	=	>	?
@	A	B	C	D	E	F	G	H	I	J	K	L	M	N	O
P	Q	R	S	T	U	V	W	X	Y	Z	[	\	]	^	_
`	a	b	c	d	e	f	g	h	i	j	k	l	m	n	o
p	q	r	s	t	u	v	w	x	y	z	{	|	}	~	

Continuation „General Menu“:

LINEARIZATION MODE		
This parameter defines the linearization function. See chapter 6.1.		
0	OFF	No linearization
1	1 QUADRANT	Linearization in the 1. quadrant
2	4 QUADRANT	Linearization in all 4 quadrants

PIN PRESELECTION	
This parameter defines the PIN-code to lock the quick start of the menu PRESELECTION VALUE for entering the preselection values (master PIN 6079). This Lock function is only useful in conjunction with active lock function in PIN PARAMETER.	
0000	No lock
...	
9999	Access after entering PIN-Code 9999

PIN PARAMETER	
This parameter defines the PIN-code for lock function of all parameters (master PIN 6079).	
0000	No lock
...	
9999	Parameterization of the unit after entering PIN-code 9999

BACK UP MEMORY		
0	NO	No back memory –up by power failure
1	YES	Backup memory by power failure, actual value will be saved

FACTORY SETTINGS		
0	No	No default values are loaded
1	Yes	Load default values of all parameters (grey marked default values)

5.2 Mode Speed

This menu defines the operation as speed indicator (RPM), tachometer or frequency meter.
In this operating mode only input A is active or Input A and Input B with 90 ° phase offset for forward/ reverse rotation detection (can be selected in menu item "FOR/REV DETECTION").
This menu is only displayed when the appropriate OPERATING MODE “Speed” is selected in the GENERAL MENU (5.1).

DISPLAY VALUE
Desired value, which should be displayed at the setting of BASE FREQUENCY.

	1	Smallest value
	1000	Default value
	99999999	Highest value

BASE FREQUENCY (HZ)
Reference frequency for the desired DISPLAY VALUE.

	1	Smallest value
	100	Default value
	500000	Highest value

DECIMAL POINT
This value defines the position of the decimal point.

	0	NO	No decimal point
	1	0000000.0	Decimal point at the specified position
	2	000000.00	Decimal point at the specified position
	3	00000.000	Decimal point at the specified position
	4	0000.0000	Decimal point at the specified position
	5	000.00000	Decimal point at the specified position
	6	00.000000	Decimal point at the specified position
	7	0.0000000	Decimal point at the specified position

SAMPLING TIME (S)
The configured value corresponds to the minimum measurement time. The Parameter is used as a filter in case of irregular frequencies. This parameter directly affects the response time of the unit.

	0.005	Shortest Sampling time
	0.1	Default value
	9.999	Longest Sampling time

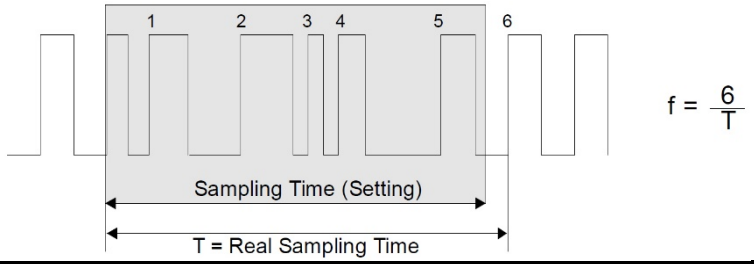

Continuation „Mode Speed“:

WAIT TIME (S)

This parameter defines the period time of the lowest frequency, accordingly the time between two rising signal edges detecting frequency 0 Hz. Frequencies with a period time higher than the set “WAIT TIME” will be detected as frequency = 0 Hz.

	0.01	Frequency = 0 Hz, for frequencies below 100 Hz
	1.00	Default value
	99.99	Frequency = 0 Hz, for frequencies below 0.01 Hz

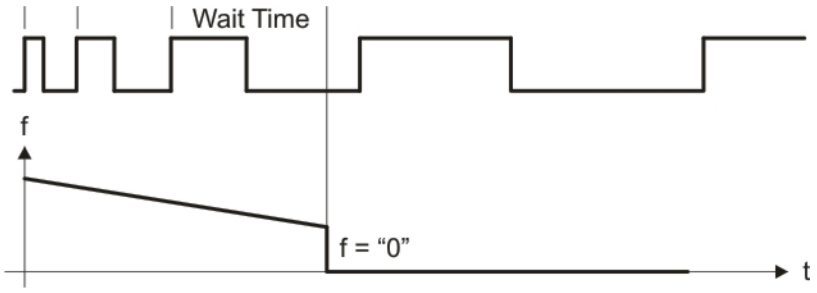

STANDSTILL TIME (S)

This parameter defines the time setting for standstill definition. A time of xx.xx seconds after detection " frequency = 0 Hz " the unit signals "standstill" and reactivates the start-up-delays.
Stand still detection can be set in PRESELECT MENU.

	0.00	Shortest time
	...	
	99.99	Largest time

AVERAGE FILTER

Selectable average or filter function to avoid measuring fluctuations by unstable frequencies. At setting 1 to 4 a floating average calculation is preformed. At settings 5 to 8, the device uses an exponential filter. The time constant T (63%) corresponds to the sampling cycles.

For example: If SAMPLING TIME = 0,1 s and AVERAGE FILTER = Exponential filter, T (63 %) = 2x SAMPLING TIME, after 0,2 seconds, 63% of the step size are reached

	0	No average value will be created
	1	2 numbers of floating average cycles
	2	4 numbers of floating average cycles
	3	8 numbers of floating average cycles
	4	16 numbers of floating average cycles
	5	Exponential filter, T (63 %) = 2x SAMPLING TIME
	6	Exponential filter, T (63 %) = 4x SAMPLING TIME
	7	Exponential filter, T (63 %) = 8x SAMPLING TIME
	8	Exponential filter, T (63 %) = 16x SAMPLING TIME

Continuation „Mode Speed“:

FOR/REV DETECTION This parameter enables the detection of direction of rotation (Input A, Input B with 90°).		
0	OFF	Direction of rotation detection off
1	ON	Direction of rotation detection on

5.3 Mode Process Time

In this menu the operation is defined as baking time or processing time indicator (reciprocal speed) Only input A is used. This menu is only displayed when the appropriate OPERATIONAL MODE in the GENERAL MENU (5.1) is selected.

DISPLAY FORMAT This parameter selects the Display Format. The corresponding decimal point will be set automatically.		
0	SECONDS	Display in seconds
1	MINUTES	Display in minutes
2	MIN:SEC	Display in minutes : seconds
3	MIN.00	Display in minutes and 1/100 minutes
4	H:M:S	Anzeige in Stunden : Minuten : Sekunden

DISPLAY VALUE Desired value, which should be displayed at the setting of BASE FREQUENCY.		
	1	Smallest value
	1000	Default value
	99999999	Highest value

BASE FREQUENCY (HZ) Reference frequency for the desired DISPLAY VALUE.		
	1	Smallest value
	100	Default value
	500000	Highest value

SAMPLING TIME (S) The configured value corresponds to the minimum measurement time. The Parameter is used as a filter in case of irregular frequencies. This parameter directly affects the response time of the unit.		
	0.005	Shortest sampling time
	0.1	Default value
	9.999	Longest sampling time

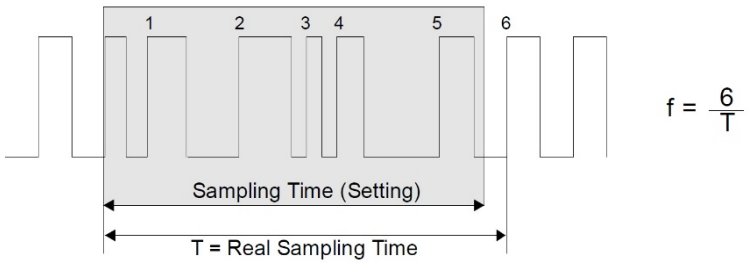

Continuation „Mode Process Time“:

WAIT TIME (S)

This parameter defines the period time of the lowest frequency, accordingly the time between two rising signal edges detecting frequency 0 Hz. Frequencies with a period time higher than the set “WAIT TIME” will be detected as frequency = 0 Hz.

	0.01	Frequency = 0 Hz, for frequencies below 100 Hz
	1.00	Default value
	99.99	Frequency = 0 Hz, for frequencies below 0.01 Hz

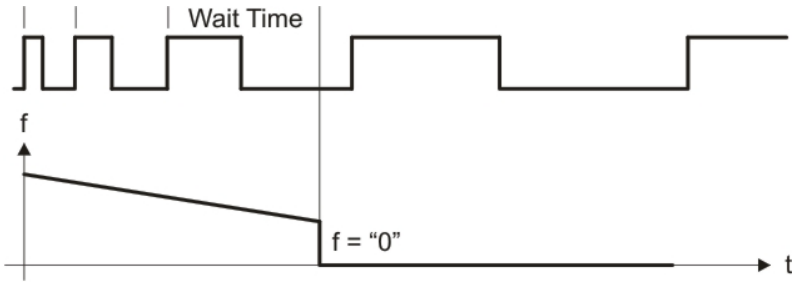

STANDSTILL TIME (S)

This parameter defines the time setting for standstill definition.
A time of xx.xx seconds after detection " frequency = 0 Hz " the unit signals "standstill" and reactivates the start-up-delays. Stand still detection can be set in PRESELECT MENU.

	0.00	Shortest time
	...	
	99.99	Longest time

AVERAGE FILTER

Selectable average or filter function to avoid measuring fluctuations by unstable frequencies. At setting 1 to 4 a floating average calculation is preformed. At settings 5 to 8, the device uses an exponential filter. The time constant T (63%) corresponds to the sampling cycles.

For example: If SAMPLING TIME = 0,1 s and AVERAGE FILTER = Exponential filter, T (63 %) = 2x SAMPLING TIME, after 0,2 seconds, 63% of the step size are reached

	0	No average value will be created
	1	2 numbers of floating average cycles
	2	4 numbers of floating average cycles
	3	8 numbers of floating average cycles
	4	16 numbers of floating average cycles
	5	Exponential filter, T (63 %) = 2x SAMPLING TIME
	6	Exponential filter, T (63 %) = 4x SAMPLING TIME
	7	Exponential filter, T (63 %) = 8x SAMPLING TIME
	8	Exponential filter, T (63 %) = 16x SAMPLING TIME

5.4 Mode Timer

In this menu the operation of timer or stopwatch is defined.
Depending on the parameterization only input A or both are used. This menu is only displayed when the appropriate OPERATIONAL MODE in the GENERAL MENU (5.1) is selected.

TIME BASE
This parameter defines the time base or resolution of the measurement.

	0	1/1000 SEC	Milliseconds
	1	1/100 SEC	1/100 seconds
	2	1/10 SEC	1/10 seconds
	3	SECONDS	Full seconds
	4	MIN.00	Minutes and 1/100 minutes
	5	MIN.0	Minutes and 1/10 minutes
	6	H:M:S	Hours : Minutes : Seconds (9999:59:59)
	7	H:M	Hours: Minutes (999999:59)

START / STOP
This parameter defines the start/stop condition of the time measurement.

	0	COUNT AT A HIGH	Time measurement active at Input A is „HIGH“
	1	COUNT AT A LOW	Time measurement active at Input A is „LOW“
	2	START A / STOP B	A rising edge at Input A starts the time measurement, a rising edge at Input B stops the time measurement.
	3	PERIODE AT A	Period time measurement: displays the time between two rising signal edges at Input A

AUTO SET / RESET

	0	NO	Time measurement works adding or subtracting, there is no automatic set/reset at next start. Start setting must be done via set/reset
	1	YES	With each start, the new time measurement starts automatically at the set value of the parameter "SetValue".

LATCH-FUNCTION

	0	NO	Real time display, counting value is visible.
	1	YES	Display shows the result of the last measurement. The time counts in the background.

SET VALUE.
A Set / Reset command (via keyboard shortcut, control input, or PC user interface), the timer is set to SET VALUE.

	0	Smallest value (Reset)
	...	
	99999999	Highest value

Continuation „Mode Time“:

INC / DEC MODE When START/STOP is setting to period time measurement, the time measurement works always adding.			
	0	INCREMENT MODE	time measurement works adding
	1	DECREMENT MODE	time measurement works subtracting

5.5 Mode Counter

In this menu the operation as position indicator, impulse counting, sum of 2 inputs, difference of 2 inputs or up-down counter is defined. Input A and Input B are used. This menu is only displayed when the appropriate OPERATIONAL MODE in GENERAL MENU (5.1) is selected.

COUNT MODE This parameter defines the counter operation.			
	0	A SINGLE	Input A is a counting input. Input B defines the counting direction: „LOW“ = forward „HIGH“ = reverse
	1	A+B	Sum counter: Impulses at A + Impulses at B
	2	A-B	Differential counter: Impulses at A – impulses at B
	3	A/B 90 x1	Quadrature counter: Impulses A, B with edge counting x1
	4	A/B 90 x2	Quadrature counter: Impulses A, B with edge counting x2
	5	A/B 90 x4	Quadrature counter: Impulses A, B with edge counting x4

FACTOR Scaling factor. With the summing mode (A+B) and the differential mode (A-B) please note that the impulse scaling factor will only affect input A For example: A setting of factor 1.23456 and 100000 input pulses will result in a value of 123456.		
	0.00001	Smallest value
	1	Default value
	99.99999	Highest value

SET VALUE Upon a reset command (via keys, Control-Inputs or PC-user interface), the counter is set to the value entered here.		
	-99999999	Smallest value
	0	Default value
	+99999999	Highest value

DECIMAL POINT This value defines the position of the decimal point.			
	0	NO	No decimal point
	1	0000000.0	Decimal point at the specified position
	2	000000.00	Decimal point at the specified position
	3	00000.000	Decimal point at the specified position
	4	0000.0000	Decimal point at the specified position
	5	000.00000	Decimal point at the specified position
	6	00.000000	Decimal point at the specified position
	7	0.0000000	Decimal point at the specified position

Continuation „Mode Counter“:

BATCH MODE
Setting of the batch counter.
The function of batch counting according to a preset value (PRESELECTION 1... 3) is only possible with the switch condition “automatic reset to zero” (RESULT <= PRES-> 0) or “set the counter value” (RESULT <=0-> SET).

The PRESELECTION 4 is the preset value of the batch counter, when the BATCH MODE is active.

For example: If the batch counter should increment 1 all 1000 pulses, the value e.g. PRESELCTION 1 has to be set to 1000, the corresponding switch condition MODE 1 to "RESULT>=PRES->0" and BATCH MODE to INCREMENT BATCH. Should an output be turned on after a batch amount of 33, PRESELECTION 4 has to be set to 33 and the switching condition of MODE 4 has to be set to display value greater than or equal (RESUL>=PRES).

	0	OFF	No batch counter
	1	INCREMENT BATCH	increment batch counter
	2	DECREMENT BATCH	decrement batch counter
	3	USE INPUTS ONLY	increment / decrement batch counter only by external commands (see command menu)

BATCH SET VALUE
When a reset/set command (via keyboard, control input or PC user interface) the batch counter is set to the BATCH SET VALUE. Parameter only visible when BATCH MODE is active.

	0	Smallest value
	...	
	99999999	Highest value

5.6 Mode Velocity

In this menu the operation as a runtime measurement for speed is defined.
Input A is the start input and Input B is the stop input. This menu is only displayed when the appropriate OPERATIONAL MODE in GENERAL MENU (5.1) is selected.

START / STOP
Setting the start and stop condition.

	RISE TO RISE	Start = rising edge at input A Stop = rising edge at input B
	FALL TO FALL	Start = falling edge at Input A Stop = falling edge at Input B
	RISE TO FALL	Start = rising edge at input A Stop = falling edge at Input B
	FALL TO RISE	Start = falling edge at Input A Stop = rising edge at input B

DISPLAY VALUE
Desired value, which should be displayed at the setting of BASE TIME (S).

	1	Smallest value
	1000	Default value
	999999	Highest value

BASE TIME (S)

Reference time for the desired DISPLAY VALUE.

	0.001	Smallest value
	1	Default value
	999.999	Highest value

DECIMAL POINT

This value defines the position of the decimal point.

	0	NO	No decimal point
	1	0000000.0	Decimal point at the specified position
	2	000000.00	Decimal point at the specified position
	3	00000.000	Decimal point at the specified position
	4	0000.0000	Decimal point at the specified position
	5	000.00000	Decimal point at the specified position
	6	00.000000	Decimal point at the specified position
	7	0.0000000	Decimal point at the specified position

WAIT TIME (S)

This parameter defines the period time of the lowest frequency, accordingly the time between two rising signal edges detecting frequency 0 Hz. Frequencies with a period time higher than the set “WAIT TIME” will be detected as frequency = 0 Hz.

	0.00	The display value is retained until a new value is determined.
	0.01	Frequency = 0 Hz, for frequencies below 100 Hz
	...	
	99.99	Frequency = 0 Hz, for frequencies below 0.01 Hz

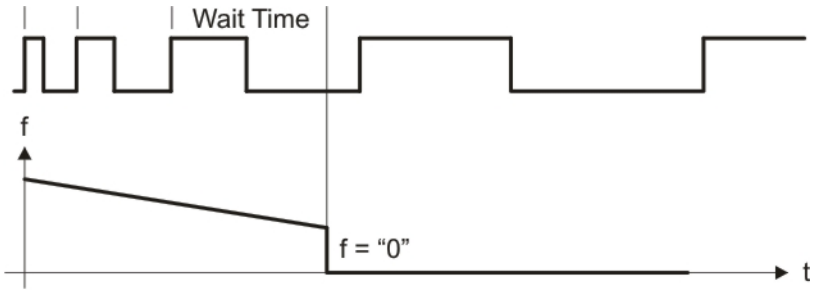

STANDSTILL TIME

This parameter defines the time setting for standstill definition.
A time of xx.xx seconds after detection " frequency = 0 Hz " the unit signals "standstill" and reactivates the start-up-delays. Stand still detection can be set in PRESELECT MENU.
This STANDSTILL TIME is suitable at WAIT TIME unequal 0.000 only.

	0.00	Shortest time
	...	
	99.99	Longest time

5.7 Preselection Values

This menu is used to set the preselection values or the switching points.
The preselection values / switching points are always referred to the display value.
This menu is only available for devices with option Analog-, Control-, Relay-Output.

PRESELECTION 1 Preselection / switching point 1		
	-99999999	Smallest value
	1000	Default value
	+99999999	Highest value

PRESELECTION 2 Preselection / switching point 2		
	-99999999	Smallest value
	2000	Default value
	+99999999	Highest value

PRESELECTION 3 Preselection / switching point 3		
	-99999999	Smallest value
	3000	Default value
	+99999999	Highest value

PRESELECTION 4 Preselection / switching point 4 If the BATCH MODE is active, the batch counter is compared with the preselection value 4.		
	-99999999	Smallest value
	4000	Default value
	+99999999	Highest value

5.8 Preselection 1 Menu

This function is only available for devices with option Analog-, Control-, Relay-Output.

MODE 1

Switching conditions for preselection 1. Output/ relay/ display switches under the following conditions:

0	|RESULT|>=|PRES|	Absolute value of the display value is greater or equal absolute value of PRESELECTION 1 With HYSTERESIS 1 not equal 0 the following switching condition is applied: Display value >= PRESELECTION 1 → ON, Display value < PRESELECTION 1 – HYSTERESIS 1 →OFF
1	|RESULT|<=|PRES|	Absolute value of the display value is less or equal absolute value of PRESELECTION 1 (start-up suppression (START UP DELAY) is advisable) With HYSTERESIS 1 not equal 0 the following switching condition is applied: Display value <= PRESELECTION 1 → ON, Display value > PRESELECTION 1 + HYSTERESIS 1 →OFF
2	|RESULT|=|PRES|	Absolute value of the display value is equal absolute value of PRESELECTION 1 A range (Preselection +/- ½ Hysteresis) can be defined and monitored in conjunction with the hysteresis. With HYSTERESIS 1 not equal 0 the following switching condition is applied: Display value > PRESELECTION 1 + ½ HYSTERESIS 1 → OFF, Display value < PRESELECTION 1 - ½ HYSTERESIS 1 → OFF
3	RESULT>=PRES	Display value is greater or equal PRESELECTION 1, e.g. overspeed With HYSTERESIS 1 not equal 0 the following switching condition is applied: Display value >= PRESELECTION 1 → ON, Display value < PRESELECTION 1 – HYSTERESIS 1 →OFF
4	RESULT<=PRES	Display value is less or equal PRESELECTION 1, e.g. underspeed (start-up suppression (START UP DELAY) is advisable) With HYSTERESIS 1 not equal 0 the following switching condition is applied: Display value <= PRESELECTION 1 → ON, Display value > PRESELECTION 1 + HYSTERESIS 1 →OFF
5	RESULT=PRES	Display value is equal PRESELECTION 1. A range (Preselection +/- ½ Hysteresis) can be defined and monitored in conjunction with the hysteresis. With HYSTERESIS 1 not equal 0 the following switching condition is applied: Display value > PRESELECTION 1 + ½ HYSTERESIS 1 → OFF, Display value < PRESELECTION 1 - ½ HYSTERESIS 1 → OFF
6	RESULT=0	Display value is zero (Standstill after STANDSTILL TIME(s)), e.g. standstill monitoring, (only in mode SPEED and PROCESS TIME).
7	RESULT>= PRES->0	Auto reset at PRESELECTION 1: (only in mode TIMER or COUNTER) Display value is greater or equal PRESELECTION 1, the display value is set to zero. If the BACH MOD is active, the batch counter increments or decrements when the display value is set to zero.
8	RESULT<= 0->SET	Auto set to PRESELECTION 1: (only in mode TIMER or COUNTER) Display value is less or equal zero, the display value is set to PRESELECTION 1 If the BACH MOD is active, the batch counter increments or decrements when the display value is set to PRESELECTION 1.
9	RES>=PRES-TRAIL	Trailing PRESELECTION 1: Display value is greater or equal PRESELECTION 2 – PRESELECTION 1 → ON, PRESELECTION 1 is the trailing value from PRESELECTION 2

Continuation „PRESELECTION 1 MENU“:

HYSTERESIS 1 This parameter defines the switching hysteresis of the switch-off point for preselection 1		
	0	No switching hysteresis
	...	
	9999	Switching hysteresis of 99999

PULSE TIME 1 (S) Duration of output pulse for the switching condition of preselection 1		
	0.000	No output pulse (static signal)
	...	
	60.000	Pulse duration of 60 seconds

OUTPUT TARGET 1 Assignment of an output or relay for the switching condition of preselection 1. If more than one switching condition is assigned to one output / relay, the output is set when at least one switching condition is true			
	0	NO	No assignment
	1	CTRL OUT 1	Switching condition assigned to “Ctrl. Out 1”
	2	CTRL OUT 2	Switching condition assigned to “Ctrl. Out 2”
	3	CTRL OUT 3	Switching condition assigned to “Ctrl. Out 3”
	4	CTRL OUT 4	Switching condition assigned to “Ctrl. Out 4”
	5	RELAY 1	Switching condition assigned to “Rel. 1”
	6	RELAY 2	Switching condition assigned to “Rel. 2”

OUTPUT POLARITY 1 Polarity for the switching condition of preselection 1			
	0	ACTIVE HIGH	Switching condition is true → Active „HIGH“
	1	ACTIVE LOW	Switching condition is true → Active „LOW“

OUTPUT LOCK 1 Latch for the switching condition of preselection 1			
	0	NO	No latch for preselection
	1	YES	Latch for preselection (command LOCK RELEASE will clear latch)

Continuation „PRESELECTION 1 MENU“:

START UP DELAY 1 (S)		
Start-up suppression for the switching condition of preselection 1. Time to start the monitoring function. This adjustment is only valid for the switching condition |RESULT|<=|PRES| or RESULT<=PRES and mode SPEED and PROCESS TIME. (Start Up Delay 3 and 4 have an automatic start up suppression).		
	00.000	No start-up suppression
	...	
	60.000	Start-up suppression in seconds

EVENT COLOR 1			
Event-depending change of the display color for the switching condition of preselection 1. EVENT COLOR 1 has the lowest priority. EVENT COLOR 2 ... 4 are allowed to overwrite this color change.			
	0	**NO CHANGE**	No color change.
	1	**CHANGE TO RED**	Color change to red
	2	**CHANGE TO GREEN**	Color change to green
	3	**CHANGE TO YELLOW**	Color change to yellow

5.9 Preselection 2 Menu

MODE 2
Switching conditions for preselection 2. Output/ relay/ display switches under the following conditions:

			See chapter PRESELECTION 1 MENU
	9	RES>=PRES-TRAIL	Trailing preselection 2: Display value is greater or equal to PRESELECTION 1 – PRESELECTION 2 → ON, PRESELECTION 2 is the trailing preselection from PRESELECTION 1.

HYSTERESIS 2
This parameter defines the switching hysteresis of the switch-off point for preselection 2.
See chapter PRESELECTION 1 MENU.

PULSE TIME 2 (S)
Duration of output pulse for the switching condition of preselection 2.
See chapter PRESELECTION 1 MENU.

OUTPUT TARGET 2
Assignment of an output or relay for the switching condition of preselection 2.
See chapter PRESELECTION 1 MENU.

OUTPUT POLARITY 2
Polarity for the switching condition of preselection 2.
See chapter PRESELECTION 1 MENU.

OUTPUT LOCK 2
Latch for the switching condition of preselection 2.
See chapter PRESELECTION 1 MENU.

START UP DELAY 2 (S)
Start-up suppression for the switching condition of preselection 2.
See chapter PRESELECTION 1 MENU.
(Start Up Delay 3 and 4 have an automatic start up suppression).

EVENT COLOR 2
Event-depending change of the display color for the switching condition of preselection 2.
See chapter PRESELECTION 1 MENU.

5.10 Preselection 3 Menu

MODE 3
Switching conditions for preselection 3. Output/ relay/ display switches under the following conditions:

			See chapter PRESELECTION 1 MENU
	9	RES>=PRES-TRAIL	Trailing preselection 3: Display value is greater or equal to PRESELECTION 4 – PRESELECTION 3 → ON, PRESELECTION 3 is the trailing preselection from PRESELECTION 4.

HYSTERESIS 3
This parameter defines the switching hysteresis of the switch-off point for preselection 3.
See chapter PRESELECTION 1 MENU.

PULSE TIME 3 (S)
Duration of output pulse for the switching condition of preselection 3.
See chapter PRESELECTION 1 MENU.

OUTPUT TARGET 3
Assignment of an output or relay for the switching condition of preselection 3.
See chapter PRESELECTION 1 MENU.

OUTPUT POLARITY 3
Polarity for the switching condition of preselection 3.
See chapter PRESELECTION 1 MENU.

OUTPUT LOCK 3
Latch for the switching condition of preselection 3.
See chapter PRESELECTION 1 MENU.

START UP DELAY 3
Start-up suppression for the switching condition of preselection 3.
Time to start the monitoring function.
This adjustment is only valid for the switching condition |RESULT|<=|PRES| or RESULT<=PRES and mode SPEED and PROCESS TIME (Start Up Delay 1 and 2 have a time-dependent start up suppression).

	0	OFF	No start-up suppression
	1	AUTO	Automatic start up suppression, until the preselection value / switching point is exceeded for the first time.

EVENT COLOR 3
Event-depending change of the display color for the switching condition of preselection 3.
See chapter PRESELECTION 1 MENU.

5.11 Preselection 4 Menu

If the BATCH MODE is active, the batch counter is compared with the preselection value 4.

MODE 4
Switching conditions for preselection 4. Output/ relay/ display switches under the following conditions:

			See chapter PRESELECTION 1 MENU
	9	RES>=PRES-TRAIL	Trailing preselection 4: Display value is greater or equal to PRESELECTION 3 – PRESELECTION 4 → ON, PRESELECTION 4 is the trailing preselection from PRESELECTION 3.

HYSTERESIS 4
This parameter defines the switching hysteresis of the switch-off point for preselection 4.
See chapter PRESELECTION 1 MENU.

PULSE TIME 4 (S)
Duration of output pulse for the switching condition of preselection 3.
See chapter PRESELECTION 1 MENU.

OUTPUT TARGET 4
Assignment of an output or relay for the switching condition of preselection 4.
See chapter PRESELECTION 1 MENU.

OUTPUT POLARITY 4
Polarity for the switching condition of preselection 4.
See chapter PRESELECTION 1 MENU.

OUTPUT LOCK 4
Latch for the switching condition of preselection 4.
See chapter PRESELECTION 1 MENU.

START UP DELAY 4
Start-up suppression for the switching condition of preselection 4.
This adjustment is only valid for the switching condition |RESULT|<=|PRES| or RESULT<=PRES and mode SPEED and PROCESS TIME. (Start Up Delay 1 and 2 have a time-dependent start up suppression).

	0	OFF	No start-up suppression
	1	AUTO	Automatic start up suppression, until the preselection value / switching point is exceeded for the first time.

EVENT COLOR 4
Event-depending change of the display color for the switching condition of preselection 4.
See chapter PRESELECTION 1 MENU.

5.12 Serial Menu

This menu defines the basic settings of serial interface.
This function is only available for devices with option Analog-, Control-Output.

UNIT NUMMER
This parameter defines serial device addresses. The addresses between 11 and 99 can be assigned to the devices. Addresses with zero are not allowed, there are used as broadcast addresses.

	11	Smallest address
	...	
	99	Highest address

SERIAL BAUD RATE
This parameter defines the serial baud rate

	0	**9600**	9600 baud
	1	**19200**	19200 baud
	2	**38400**	38400 baud

SERIAL FORMAT
This parameter defines the bit data format.

	0	**7-EVEN-1**	7 data	Parity even	1 Stop
	1	**7-EVEN-2**	7 data	Parity even	2 Stops
	2	**7-ODD-1**	7 data	Parity odd	1 Stop
	3	**7-ODD-2**	7 data	Parity odd	2 Stops
	4	**7-NONE-1**	7 data	no Parity	1 Stop
	5	**7-NONE-2**	7 data	no Parity	2 Stops
	6	**8-EVEN-1**	8 data	Parity even	1 Stop
	7	**8-ODD-1**	8 data	Parity odd	1 Stop
	8	**8-NONE-1**	8 data	no Parity	1 Stop
	9	**8-NONE-2**	8 data	no Parity	2 Stops

SERIAL INIT
This parameter defines the baud rate for the initialization to the user interface OS6.0. With settings larger than 9600 the initialization time can be reduced.

	0	**NO**	Initialization with 9600 baud. Then the device operates with the value selected by the user.
	1	**YES**	Initialization with the baud rate set by SERIAL BAUD RATE. Then the device operates with the value selected by the user.

Continuation „Serial Menu”:

SERIAL PROTOCOL

Determines the sequence of characters send, when using the serial output for cyclic data transmission under time control (xxxxxxx = value SERIAL VALUE).
Setting „1“ removes the unit address from the string which allows a slight faster transmission cycle.

	0	Transmission report = Unit Nr., +/-, data, LF, CR 1 | 1 | +/- | X | X | X | X | X | X | X | LF | CR
	1	Transmission report = +/-, data, LF, CR +/- | X | X | X | X | X | X | X | LF | CR

SERIAL TIMER (S)

This register determines the cycle time in seconds for cycling transmission of SERIAL VALUE when using the serial output. (On a serial request, the cycling transmission is stopped for 20 s)

	0.000	All cyclic transmission is switched off. The unit will send data upon a serial request or with command SERIAL PRINT.
	...	
	60.000	Cycle time in seconds.

SERIAL VALUE

This parameter defines the value to be transmitted.

	Setting	Code	Register contents
	0	:0	Measurement_Result
	1	:1	Speed_Value
	2	:2	Time_Result
	3	:3	Counter
	4	:4	Velocity_Speed
	5	:5	Batch_Counter
	6	:6	Minimal_Value
	7	:7	Maximal_Value
	8	:8	N.A.
	9	:9	N.A.

MODBUS

This parameter enables the Modbus protocol and determines the Modbus address.
For details of the Modbus communication please refer to the additional manual R60045.0002.

	0	Modbus disabled Serial interface is using Lecom protocol (Kuebler default protocol)
	1 ... 247	Modbus enabled: Serial interface is using Modbus RTU protocol The set value is the Modbus address of the device.

5.13 Analog Menu

This menu defines the basic settings of the analog output.
This function is only available for devices with option Analog-Output.

ANALOG FORMAT

This parameter defines the output characteristics. The analogue output is proportional to the display value. With setting ANALOG FORMAT (-10 ... +10 V) in MODE COUNTER the polarity of the analog output depends on the polarity of the display value.

	0	-10...10V	-10 ... +10 V
	1	0...20M	0 ... 20 mA
	2	4...20MA	4 ... 20 mA

ANALOG START

This parameter defines the start value of the analog conversion. This start value is corresponding to the display value for an analog output of 0 V or 0/4 mA.

	-99999999	Smallest start value
	0	Default value
	+99999999	Highest start value

ANALOG END

This parameter defines the end value of the analog conversion. This end value is corresponding to the display value for an analog output of (+/-) 10 V or 20mA.

	-99999999	Smallest end value
	10000	Default Wert
	+99999999	Highest end value

ANALOG GAIN (%)

This parameter specifies the maximum conversion of the analog output in %.

e. g. 102.00 corresponds to a conversion of 10.2 V or 20.4 mA, when the ANALOG END value is reached.
e. g. 95.00 corresponds to a conversion of 9.5 V or 18 mA, when the ANALOG END value is reached.

	0	Smallest gain
	100	Default value
	110	Highest gain

ANALOG OFFSET (%)

This parameter defines the zero offset of the analog output.

e. g. 0.20 result in an offset of 0.02 V or 0.04 mA at ANALOG START value

	-99.99	Smallest offset
	0	Default value
	+99.00	Highest offset

5.14 Command Menu

INPUT 1 ACTION This parameter defines the function of the input "Ctrl. In 1".			
0	NO	No function	
1	RESET/SET VALUE	Mode Timer: Reset the value to 0. Mode Counter: Reset / set the value to „SET VALUE". Mode Velocity: Reset the value to 0.	(d) (s)
2	FREEZE	Freeze actual display value	(s)
3	KEY LOCK	disable touch screen	(s)
4	LOCK RELEASE	Loosen locking of all outputs / relay	(d)
5	RESET MIN/MAX	Reset of the min. / max. values	(d) (s)
6	SERIAL PRINT	Sending of serial data, see parameter SERIAL VALUE	(d)
7	TEACH PRESEL. 1	Current display value is stored as PRESELECTION 1	(d)
8	TEACH PRESEL. 2	Current display value is stored as PRESELECTION 2	(d)
9	TEACH PRESEL. 3	Current display value is stored as PRESELECTION 3	(d)
10	TEACH PRESEL. 4	Current display value is stored as PRESELECTION 4	(d)
11	SCROLL DISPLAY	Display switching (see display in operation mode)	(d)
12	CLEAR LOOP TIME	N.A.	
13	START PRESELECT	N.A.	
14	ACTIVATE	N.A.	
15	STORE DATA	N.A.	
16	TESTPROGRAM	N.A.	
17	SET RED COLOR	The display lights up red. The color can be changed by the event-dependent color switching in the PRESELECTION 1... 4	(d)
18	SET GREEN COLOR	The display lights up green. The color can be changed by the event-dependent color switching in the PRESELECTION 1... 4	(d)
19	SET YELLOW COLOR	The display lights up yellow The color can be changed by the event-dependent color switching in the PRESELECTION 1... 4	(d)
20	INCREMENT BATCH	Increase the batch counter (see mode counter)	(d)
21	DECREMENT BATCH	Decrease of the batch counter (see mode counter)	(d)
22	RESET/SET BATCH	Reset the batch counter (see mode counter)	(d)

(s) = static switching (level evaluation)
INPUT CONFIG must be set to active LOW / HIGH
(d) = dynamic switching (edge evaluation)
INPUT CONFIG must be set to RISING/FALLING EDGE

Continuation “Command Menu”:

INPUT 1 CONFIG
This parameter defines the switching characteristics of the input “Ctrl. In 1”.

	0	**ACTIVE LOW**	Active at „LOW“ (static)
	1	**ACTIVE HIGH**	Active at „HIGH“ (static)
	2	**RISING EDGE**	Activate at rising edge
	3	**FALLING EDGE**	Activate at falling edge

INPUT 2 ACTION
This parameter defines the function of the input “Ctrl. In 2”.
See parameter INPUT 1 ACTION.

INPUT 2 CONFIG
This parameter defines the switching characteristics of the input “Ctrl. In 2”.
See parameter INPUT 1 CONFIG.

INPUT 3 ACTION
This parameter defines the function of the input “Ctrl. In 3”.
See parameter INPUT 1 ACTION.

INPUT 3 CONFIG
This parameter defines the switching characteristics of the input “Ctrl. In 3”.
See parameter INPUT 1 CONFIG.

5.15 Display Menu

Parameter changes become active only after closing the menu selection.

COLOR

This parameter defines the display color.
Event-depending change of the display color by a switching condition is possible (see PRESELECTION 1...4 MENU)
Event-depending changes are only available for devices with option Analog-, Control-, Relay-Output.

	0	RED	Red display
	1	GREEN	Green display
	2	YELLOW	Yellow display

BRIGHTNESS (%)

This parameter defines the brightness of the display in percent

	10	Min. brightness
	90	Default value
	100	Max. brightness

CONTRAST

This parameter defines the viewing angle.

	0	Viewing angle from top
	1	Viewing angle from center
	2	Viewing angle from bottom

SCREEN SAVER (S)

This parameter defines the time in seconds until the display is switched off, after the last touch action.
A new touch action will activate the display again.

	0	No switch off
	...	
	9999	Longest time to switch off

UP-DATE-TIME (S)

This parameter defines the update time in seconds of the display only.

	0.005	Shortest update time in sec.
	0.1	Default value, 0.1 sec.
	9.999	Longest update time in sec.

FONT

This parameter defines the setting of the font style.

	0	Standard
	1	Font 1

5.16 Linearization Menu

The linearization function is defined in this menu. The linearization points are only used in operation mode SPEED, PROCESS TIME or COUNTER. This menu will only be showed, if the LINEARIZATION MODE in GENERAL MENU is selected.

Linearization description and examples are shown in the appendix.

P1(X) - P24(X) X-coordinate of the linearization point. This value representing the display value which the unit show in the display without linearization.		
	-99999999	Smallest X-coordinate
	0	Default value
	+99999999	Largest X-coordinate

P1(Y) - P24(Y) Y-coordinate of the linearization point This is the display value, which the unit should show in the display with linearization. E.g. P2(X) is replaced by P2(Y).		
	-99999999	Smallest Y-coordinate
	0	Default value
	+99999999	Largest Y-coordinate

6 Appendix

6.1 Data readout via serial interface

All codes shown in the parameter SERIAL VALUE are available for serial readout by PC or PLC. The communication of Kübler devices is based on the Drivecom protocol according to ISO 1745 or the Modbus RTU protocol. All protocol details can be found in our manual SERPRO (Drivecom) which is available for download from our homepage www.kuebler.com and in the chapter "Modbus RTU Interface" in this manual.

To request for a data transmission you must send the following request string to the converter:

EOT	AD1	AD2	C1	C2	ENQ

EOT = control character (Hex 04)
AD1 = unit address, High Byte
AD2 = unit address, Low Byte
C1 = register code, High Byte
C2 = register code, Low Byte
ENQ = control character (Hex 05)

The following example shows the request string for readout of the actual input frequency of a monitor (Code :1) from a unit with unit address 11:

ASCII-Code:	EOT	1	1	:	1	ENQ
Hex-Code:	04	31	31	3A	31	05
Binary-Code:	0000 0100	0011 0001	0011 0001	0011 1010	0011 0001	0000 0101

After a correct request, the unit will respond:

STX	C1	C2	xxxxx	ETX	BCC

STX = control character (Hex 02)
C1 = register code, High Byte
C2 = register code, Low Byte
xxxxx = readout data
ETX = control character (Hex 03)
BCC = block check character

6.2 Modbus RTU Interface

The Modbus interface of the 57xT series is a standard Modbus RTU Slave and provides the following Modbus functions:

- Read Coils
- Write Single Coil
- Read Holding Registers
- Write Multiple Registers
- Diagnosis

For the operation of the interface module and the understanding of this manual basic knowledge in Modbus RTU communication is presupposed.

6.2.1 Parameter setting

Required parameter settings in 6.571T.XXX.X0X / 6.571T.XXX.XAX "Serial menu":

UNIT NUMMER Not valid for Modbus communication (For setting of Modbus address see parameter "MODBUS")

SERIAL BAUD RATE This parameter defines the serial baud rate			
	0	**9600**	9600 baud
	1	**19200**	19200 baud
	2	**38400**	38400 baud

SERIAL FORMAT This parameter defines the bit data format.					
	0	7-EVEN-1	Do not use with Modbus protocol		
	1	7-EVEN-2			
	2	7-ODD-1			
	3	7-ODD-2			
	4	7-NONE-1			
	5	7-NONE-2			
	6	**8-EVEN-1**	8 data bits	Parity even	1 stop bit
	7	**8-ODD-1**	8 data bits	Parity odd	1 stop bit
	8	8-NONE-1	Do not use with Modbus protocol		
	9	**8-NONE-2**	8 data bits	no Parity	2 stop bits

SERIAL INIT
Not valid for Modbus communication

SERIAL PROTOCOL
Not valid for Modbus communication

SERIAL TIMER (S)
Not valid for Modbus communication

SERIAL VALUE
Not valid for Modbus communication

MODBUS
This parameter enables the Modbus protocol and determines the Modbus address.

	0	Do not use for Modbus protocol (Modbus disabled)
	1 ... 247	Modbus enabled: Serial interface is using Modbus RTU protocol The number set here determines the Modbus node address.

6.2.2 Modbus Communication

The following Modbus functions are available:

6.2.2.1 Read Holding Registers and Write Multiple Registers

With the functions “Read Holding Registers” and “Write Multiple Registers” it is possible to access all registers of the device.

All variables (actual data) and status registers are mapped to Modbus Holding Registers.
However, as all registers of the device are 32 bit registers but Modbus Holding registers are only 16 bit registers, each register of the device requires two Holding registers.
(For this reason the use of Modbus function “Write Single Register” is not possible.)

It is only possible to access to one single register of the 57xT device by each read or write operation, therefore the “Quantity (or number) of registers” in the Modbus request must always be 2.

Access to parameters
Holding Register 0x0000 / 0x0001 hex and following allow access to the device parameters.

The holding register numbers for a certain parameter can be calculated by the parameter # that can be found in the parameter table in the 57xT device manual:
Holding Register low = (parameter #) x 2
Holding Register high = (parameter #) x 2 + 1

Example:
Access to parameter # 51 “PRESELECTION 1” by Holding Register 0x0066 and 0x0067 hex.

Access to actual data

Holding Register 0x1000 / 0x1001 hex and following allow access to variables of the device (actual data registers):

Holding Register 0x1000 / 0x1001 hex → Actual data with serial Code ":0" (Display value)
Holding Register 0x1002 / 0x1003 hex → Actual data with serial Code ":1"
Holding Register 0x1004 / 0x1005 hex → Actual data with serial Code ":2"
Holding Register 0x1006 / 0x1007 hex → Actual data with serial Code ":3"
etc.

Access to status registers

Holding Register 0x2000 / 0x2001 hex and following allow access to status registers of the device:

Holding Register 0x2000 / 0x2001 hex → Output Status (Ctrl. Out status, read only)
Holding Register 0x2002 / 0x2003 hex → Serial Commands
Holding Register 0x2004 / 0x2005 hex → External Command (Ctrl. In status, read only)
Holding Register 0x2006 / 0x2007 hex → All Commands (read only)

6.2.2.2 Read Coils and Write Single Coil

With the functions "Read Coils" and "Write Single Coil" it is possible to read and set/reset single commands:

Coil number	Serial code of command	Command	
0	54	Reset / Set	Reset/Set Value
1	55	Freeze Display	Freeze actual display value
2	56	Touch Disable	Disable touch screen
3	57	Clear Lock	Loosen locking of all outputs / relay
4	58	Clear Min/Max	Reset of the min. / max. values
5	59	Serial Print (do not use with Modbus)	Sending of serial data
6	60	Teach Preset 1	Current display value is stored as PRESELECTION 1
7	61	Teach Preset 2	Current display value is stored as PRESELECTION 2
8	62	Teach Preset 3	Current display value is stored as PRESELECTION 3
9	63	Teach Preset 4	Current display value is stored as PRESELECTION 4
10	64	Scroll Display	Display switching (see display in operation mode)
11	65	Clear Loop Time	Release all latched switching conditions
12	66	Start Preselection	The preselection starts
13	67	Activate Data (not required with Modbus)	The data is activated.
14	68	Store to EEPROM	Store to EEPROM
15	69	Testprogram (do not use with Modbus)	Testprogram (do not use with Modbus)

6.2.3 Diagnostics

The device supports the diagnostics subfunction 00 "Return Query Data". Other diagnostics functions are not available.

6.3 Parameter / serial codes

#	Menue	Name	Serial Code	Value	Min	Max	Default
0	GENERAL MENU	OPERATIONAL MODE	0	3	0	4	0
1	GENERAL MENU	ENCODER PROPERTIES	1	0	0	3	0
2	GENERAL MENU	ENCODER SUPPLY	2	0	0	1	0
3	GENERAL MENU	COUNTING DIRECTION	3	0	0	1	0
4	GENERAL MENU	SCALE UNITS	4	28	0	28	0
5	GENERAL MENU	LINIARIZATION MODE	5	0	0	2	0
6	GENERAL MENU	PIN PRESELECTION	6	0	0	9999	0
7	GENERAL MENU	PIN PARAMETER	7	0	0	9999	0
8	GENERAL MENU	BACK UP MEMORY	8	1	0	1	1
9	GENERAL MENU	FACTORY SETTINGS	9	0	0	1	0
10	GENERAL MENU	-	10	0	0	0	0
11	GENERAL MENU	-	11	0	0	0	0
12	MODE SPEED	DISPLAY VALUE	12	1000	1	99999999	1000
13	MODE SPEED	BASE FREQUENCY (HZ)	13	100	1	500000	100
14	MODE SPEED	DECMIAL POINT	14	1	0	7	1
15	MODE SPEED	SAMPLING TIME (S)	15	100	5	9999	100
16	MODE SPEED	WAIT TIME (S)	16	100	1	9999	100
17	MODE SPEED	STANDSTILL TIME (S)	17	0	0	9999	0
18	MODE SPEED	AVERAGE FILTER	18	0	0	8	0
19	MODE SPEED	-	19	0	0	0	0
20	MODE SPEED	-	20	0	0	0	0
21	MODE PROCESS TIME	DISPLAY FORMAT	21	0	0	3	0
22	MODE PROCESS TIME	DISPLAY VALUE	22	1000	1	99999999	1000
23	MODE PROCESS TIME	BASE FREQUENCY (HZ)	23	100	1	500000	100
24	MODE PROCESS TIME	SAMPLING TIME (S)	24	100	5	9999	100
25	MODE PROCESS TIME	WAIT TIME (S)	25	100	1	9999	100
26	MODE PROCESS TIME	STANDSTILL TIME (S)	26	0	0	9999	0
27	MODE PROCESS TIME	AVERAGE FILTER	27	0	0	8	0
28	MODE PROCESS TIME	-	28	0	0	0	0
29	MODE PROCESS TIME	-	29	0	0	0	0
30	MODE TIMER	TIME BASE	30	7	0	7	0
31	MODE TIMER	START / STOP	31	2	0	3	2
32	MODE TIMER	AUTO RESET	32	0	0	1	0
33	MODE TIMER	LATCH FUNCTION	33	0	0	1	0
34	MODE TIMER	SET VALUE	34	0	0	99999999	0
35	MODE TIMER	INC / DEC MODE	35	0	0	1	0
36	MODE COUNTER	COUNT MODE	36	3	0	5	3
37	MODE COUNTER	FACTOR	37	1000	1	9999999	100000
38	MODE COUNTER	SET VALUE	38	0	-99999999	99999999	0
39	MODE COUNTER	DECIMALPOINT	39	0	0	7	0
40	MODE COUNTER	BATCH MODE	40	1	0	3	0
41	MODE COUNTER	BATCH SET VALUE	41	0	0	99999999	0
42	MODE COUNTER	-	42	0	0	0	0

Continuation “Parameter”:

#	Menue	Name	Serial Code	Value	Min	Max	Default
43	MODE VELOCITY	START / STOP	A0	0	0	3	0
44	MODE VELOCITY	DISPLAY VALUE	A1	1000	1	99999999	1000
45	MODE VELOCITY	BASE TIME (S)	A2	1000	1	999999	1000
46	MODE VELOCITY	DECIMALPOINT	A3	0	0	7	0
47	MODE VELOCITY	WAIT TIME (S)	A4	0	0	9999	0
48	MODE VELOCITY	STANDSTILL TIME (S)	A5	0	0	9999	0
49	MODE VELOCITY	-	A6	0	0	0	0
50	MODE VELOCITY	-	A7	0	0	0	0
51	PRESELECTION VALUES	PRESELECTION 1	A8	1000	-99999999	99999999	1000
52	PRESELECTION VALUES	PRESELECTION 2	A9	2000	-99999999	99999999	2000
53	PRESELECTION VALUES	PRESELECTION 3	B0	3000	-99999999	99999999	3000
54	PRESELECTION VALUES	PRESELECTION 4	B1	4000	-99999999	99999999	4000
55	PRESELECTION 1 MENU	MODE 1	B2	7	0	9	0
56	PRESELECTION 1 MENU	HYSTERESIS 1	B3	0	0	99999	0
57	PRESELECTION 1 MENU	PULSE TIME 1 (S)	B4	500	0	60000	0
58	PRESELECTION 1 MENU	OUTPUT TARGET 1	B5	1	0	6	1
59	PRESELECTION 1 MENU	OUTPUT POLARITY 1	B6	0	0	1	0
60	PRESELECTION 1 MENU	OUTPUT LOCK 1	B7	0	0	1	0
61	PRESELECTION 1 MENU	START UP DELAY 1 (S)	B8	0	0	60000	0
62	PRESELECTION 1 MENU	EVENT COLOR 1	B9	0	0	3	0
63	PRESELECTION 2 MENU	MODE 2	C0	0	0	9	0
64	PRESELECTION 2 MENU	HYSTERESIS 2	C1	0	0	99999	0
65	PRESELECTION 2 MENU	PULSE TIME 2 (S)	C2	0	0	60000	0
66	PRESELECTION 2 MENU	OUTPUT TARGET 2	C3	2	0	6	2
67	PRESELECTION 2 MENU	OUTPUT POLARITY 2	C4	0	0	1	0
68	PRESELECTION 2 MENU	OUTPUT LOCK 2	C5	0	0	1	0
69	PRESELECTION 2 MENU	START UP DELAY 2 (S)	C6	0	0	60000	0
70	PRESELECTION 2 MENU	EVENT COLOR 2	C7	0	0	3	0
71	PRESELECTION 3 MENU	MODE 3	C8	0	0	9	0
72	PRESELECTION 3 MENU	HYSTERESIS 3	C9	0	0	99999	0
73	PRESELECTION 3 MENU	PULSE TIME 3 (S)	D0	0	0	60000	0
74	PRESELECTION 3 MENU	OUTPUT TARGET 3	D1	3	0	6	3
75	PRESELECTION 3 MENU	OUTPUT POLARITY 3	D2	0	0	1	0
76	PRESELECTION 3 MENU	OUTPUT LOCK 3	D3	0	0	1	0
77	PRESELECTION 3 MENU	START UP DELAY 3	D4	0	0	1	0
78	PRESELECTION 3 MENU	EVENT COLOR 3	D5	0	0	3	0
79	PRESELECTION 4 MENU	MODE 4	D6	0	0	9	0
80	PRESELECTION 4 MENU	HYSTERESIS 4	D7	0	0	99999	0
81	PRESELECTION 4 MENU	PULSE TIME 4 (S)	D8	0	0	60000	0
82	PRESELECTION 4 MENU	OUTPUT TARGET 4	D9	4	0	6	4
83	PRESELECTION 4 MENU	OUTPUT POLARITY 4	E0	0	0	1	0
84	PRESELECTION 4 MENU	OUTPUT LOCK 4	E1	0	0	1	0
85	PRESELECTION 4 MENU	START UP DELAY 4	E2	0	0	1	0
86	PRESELECTION 4 MENU	EVENT COLOR 4	E3	0	0	3	0

Continuation “Parameter”:

#	Menue	Name	Serial Code	Value	Min	Max	Default
87	SERIAL MENU	UNIT NUMBER	90	11	11	99	11
88	SERIAL MENU	SERIAL BAUD RATE	91	0	0	2	0
89	SERIAL MENU	SERIAL FORMAT	92	0	0	9	0
90	SERIAL MENU	SERIAL INIT	9~	0	0	1	0
91	SERIAL MENU	SERIAL PROTOCOL	E4	0	0	1	0
92	SERIAL MENU	SERIAL TIMER (S)	E5	0	0	60000	0
93	SERIAL MENU	SERIAL VALUE	E6	0	0	9	0
94	SERIAL MENU	MODBUS	E7	0	0	247	0
95	ANALOG MENU	ANALOG FORMAT	E8	0	0	2	0
96	ANALOG MENU	ANALOG START	E9	0	-99999999	99999999	0
97	ANALOG MENU	ANALOG END	F0	10000	-99999999	99999999	10000
98	ANALOG MENU	ANALOG GAIN %	F1	10000	0	11000	10000
99	ANALOG MENU	ANALOG OFFSET %	F2	0	-9999	9999	0
100	ANALOG MENU	-	F3	0	0	0	0
101	ANALOG MENU	-	F4	0	0	0	0
102	COMMAND MENU	INPUT 1 ACTION	F5	20	0	22	0
103	COMMAND MENU	INPUT 1 CONFIG.	F6	2	0	3	2
104	COMMAND MENU	INPUT 2 ACTION	F7	21	0	22	0
105	COMMAND MENU	INPUT 2 CONFIG.	F8	2	0	3	2
106	COMMAND MENU	INPUT 3 ACTION	F9	22	0	22	0
107	COMMAND MENU	INPUT 3 CONFIG.	G0	2	0	3	2
108	COMMAND MENU	-	G1	0	0	0	0
109	COMMAND MENU	-	G2	0	0	0	0
110	COMMAND MENU	-	G3	0	0	0	0
111	COMMAND MENU	-	G4	0	0	0	0
112	COMMAND MENU	-	G5	0	0	0	0
113	DISPLAY MENU	COLOR	G6	0	0	2	0
114	DISPLAY MENU	BRIGHTNESS %	G7	90	10	100	90
115	DISPLAY MENU	CONTRAST	G8	1	0	2	1
116	DISPLAY MENU	SCREEN SAVER (S)	G9	0	0	9999	0
117	DISPLAY MENU	UP-DATE-TIME (S)	H0	100	5	9999	100
118	DISPLAY MENU	FONT	H1	0	0	1	0
119	DISPLAY MENU	-	H2	0	0	0	0
120	DISPLAY MENU	-	H3	0	0	0	0
121	DISPLAY MENU	-	H4	0	0	0	0
122	LINEARIZATION MENU	P1(X)	H5	0	-99999999	99999999	0
123	LINEARIZATION MENU	P1(Y)	H6	0	-99999999	99999999	0
124	LINEARIZATION MENU	P2(X)	H7	0	-99999999	99999999	0
125	LINEARIZATION MENU	P2(Y)	H8	0	-99999999	99999999	0
126	LINEARIZATION MENU	P3(X)	H9	0	-99999999	99999999	0
127	LINEARIZATION MENU	P3(Y)	I0	0	-99999999	99999999	0
128	LINEARIZATION MENU	P4(X)	I1	0	-99999999	99999999	0
129	LINEARIZATION MENU	P4(Y)	I2	0	-99999999	99999999	0
130	LINEARIZATION MENU	P5(X)	I3	0	-99999999	99999999	0
131	LINEARIZATION MENU	P5(Y)	I4	0	-99999999	99999999	0
132	LINEARIZATION MENU	P6(X)	I5	0	-99999999	99999999	0
133	LINEARIZATION MENU	P6(Y)	I6	0	-99999999	99999999	0
134	LINEARIZATION MENU	P7(X)	I7	0	-99999999	99999999	0
135	LINEARIZATION MENU	P7(Y)	I8	0	-99999999	99999999	0

Continuation “Parameter”:

#	Menue	Name	Serial Code	Value	Min	Max	Default
136	LINEARIZATION MENU	P8(X)	I9	0	-99999999	99999999	0
137	LINEARIZATION MENU	P8(Y)	J0	0	-99999999	99999999	0
138	LINEARIZATION MENU	P9(X)	J1	0	-99999999	99999999	0
139	LINEARIZATION MENU	P9(Y)	J2	0	-99999999	99999999	0
140	LINEARIZATION MENU	P10(X)	J3	0	-99999999	99999999	0
141	LINEARIZATION MENU	P10(Y)	J4	0	-99999999	99999999	0
142	LINEARIZATION MENU	P11(X)	J5	0	-99999999	99999999	0
143	LINEARIZATION MENU	P11(Y)	J6	0	-99999999	99999999	0
144	LINEARIZATION MENU	P12(X)	J7	0	-99999999	99999999	0
145	LINEARIZATION MENU	P12(Y)	J8	0	-99999999	99999999	0
146	LINEARIZATION MENU	P13(X)	J9	0	-99999999	99999999	0
147	LINEARIZATION MENU	P13(Y)	K0	0	-99999999	99999999	0
148	LINEARIZATION MENU	P14(X)	K1	0	-99999999	99999999	0
149	LINEARIZATION MENU	P14(Y)	K2	0	-99999999	99999999	0
150	LINEARIZATION MENU	P15(X)	K3	0	-99999999	99999999	0
151	LINEARIZATION MENU	P15(Y)	K4	0	-99999999	99999999	0
152	LINEARIZATION MENU	P16(X)	K5	0	-99999999	99999999	0
153	LINEARIZATION MENU	P16(Y)	K6	0	-99999999	99999999	0
154	LINEARIZATION MENU	P17(X)	K7	0	-99999999	99999999	0
155	LINEARIZATION MENU	P17(Y)	K8	0	-99999999	99999999	0
156	LINEARIZATION MENU	P18(X)	K9	0	-99999999	99999999	0
157	LINEARIZATION MENU	P18(Y)	L0	0	-99999999	99999999	0
158	LINEARIZATION MENU	P19(X)	L1	0	-99999999	99999999	0
159	LINEARIZATION MENU	P19(Y)	L2	0	-99999999	99999999	0
160	LINEARIZATION MENU	P20(X)	L3	0	-99999999	99999999	0
161	LINEARIZATION MENU	P20(Y)	L4	0	-99999999	99999999	0
162	LINEARIZATION MENU	P21(X)	L5	0	-99999999	99999999	0
163	LINEARIZATION MENU	P21(Y)	L6	0	-99999999	99999999	0
164	LINEARIZATION MENU	P22(X)	L7	0	-99999999	99999999	0
165	LINEARIZATION MENU	P22(Y)	L8	0	-99999999	99999999	0
166	LINEARIZATION MENU	P23(X)	L9	0	-99999999	99999999	0
167	LINEARIZATION MENU	P23(Y)	M0	0	-99999999	99999999	0
168	LINEARIZATION MENU	P24(X)	M1	0	-99999999	99999999	0
169	LINEARIZATION MENU	P24(Y)	M2	0	-99999999	99999999	0

Serial codes of commands:

Serial code	Command
54	RESET/SET
55	FREEZE DISPLAY
56	TOUCH DISABLE
57	CLR LOCK
58	CLR MIN MAX
59	SERIAL PRINT
60	TEACH PRES 1
61	TEACH PRES 2
62	TEACH PRES 3
63	TEACH PRES 4
64	SCROLL_DISPLAY
65	CLEAR LOOP TIME
66	START PRESELCETION
67	ACTIVATE DATA
68	STORE EEPROM
69	TESTPROGRAMM

6.4 Linearization

The linearization function of this unit allows converting a linear input signal into a non-linear developing (or vice versa). There are 24 programmable x/y coordinates available, which can be set in any desired distance over the full conversion range. Between two coordinates, the unit uses linear interpolation. Therefore it is advisable to use more coordinates in a range with strong curves and only a few coordinates where the curvature is less.

To specify an individual linearization curve, the parameter LINEARISAZATION MODE must be set to either 1 QUADRANT or 4 QUADRANT (see following diagram).

The parameters P1(X) to P24(X) are used to specify the coordinates on the x-axis. These are the measuring values that the unit normally would generate according to the actual input signal.

Now enter the attached values to parameter P1(Y) to P24(Y). These are the values that the unit will generate instead of the x- values, i.e. P5(Y) replaces P5(X) etc.

The X-Coordinates must use continuously increasing settings, i.e. P1(X) must have the lowest and P24(X) must have the highest setting. If the measured value is bigger than the last defined X-value, the corresponding Y-value is displayed.

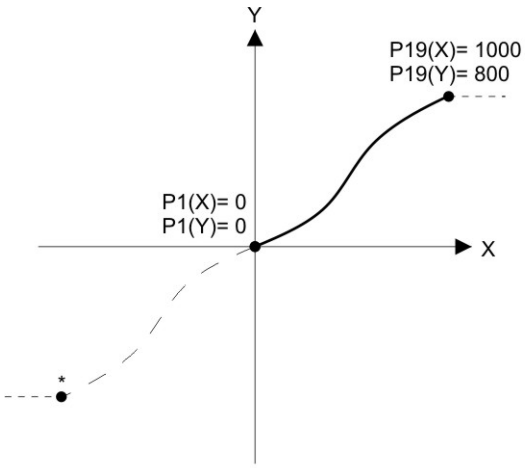

Example: Linearization Mode: 1 Quadrant
* Linearization is point symmetric to 1. Quadrant

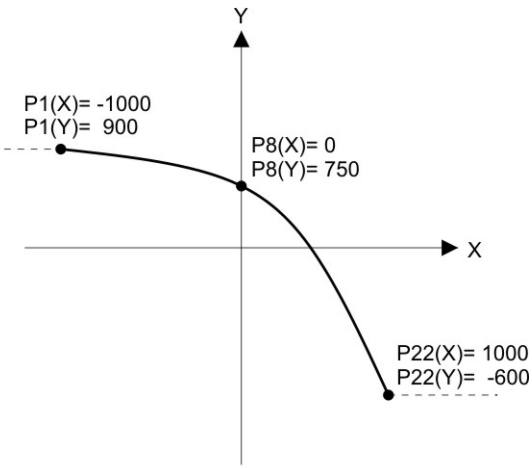

Example: Linearization Mode: 4 Quadrant

Mode: 1 Quadrant:
P1(X) must be set to zero. Linearization is only defined in the positive range and the negative range will be mirrored symmetric to central point.

Mode: 4 Quadrant:
P1(X) can also be set to a negative value. If the measured value is smaller than P1(X), P1(Y) is displayed.

Application example:

The picture below shows a watergate where the opening is picked up by means of an incremental encoder. We would like to display the clearance of the gate "d", but the existing encoder information is proportional to the angular information φ.

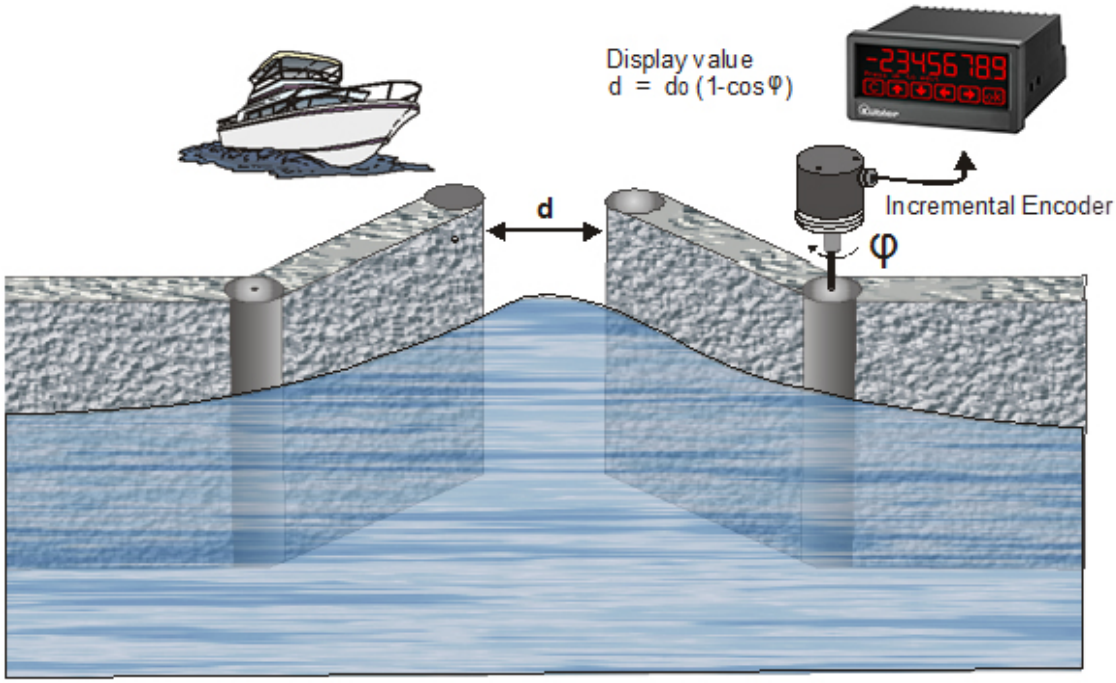

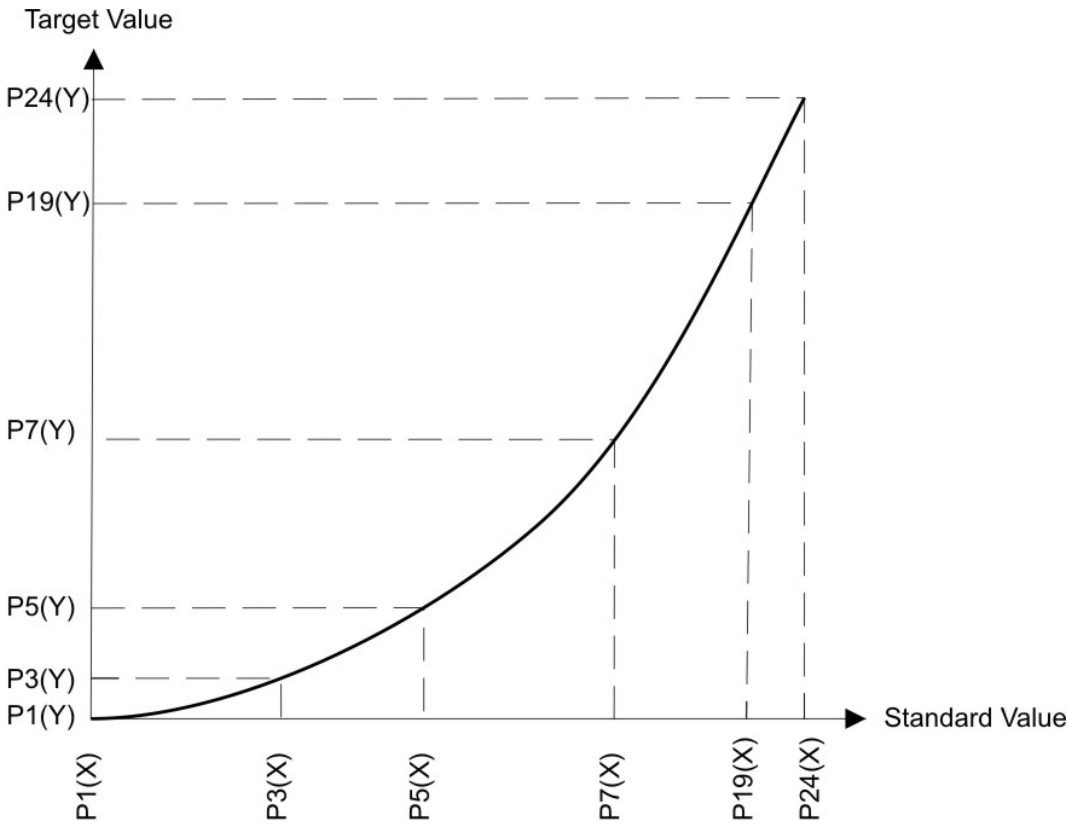

6.5 Dimensions

Dimensions in mm [inch]

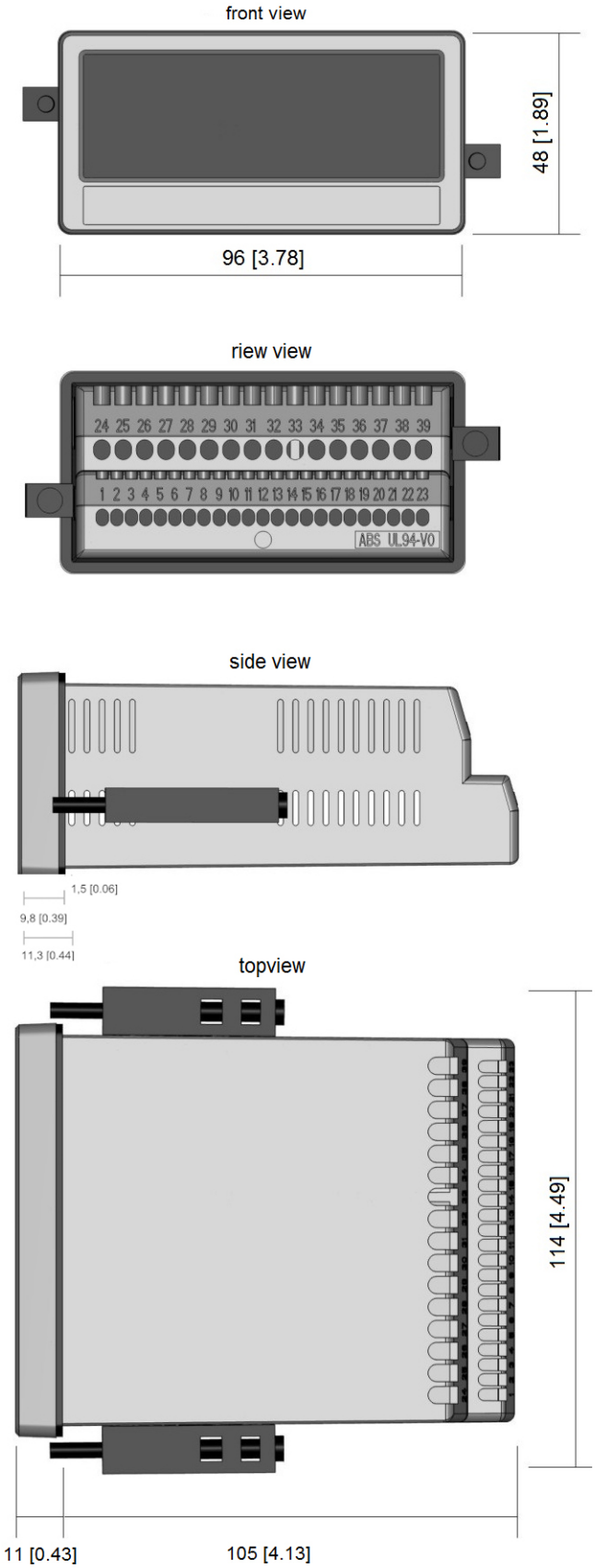

6.6 Technical specifications

Connections:	Connector type:	screw terminal, 1.5 mm² / AWG 16
Power supply (DC):	Input voltage: Protection circuit: Consumption: Fuse protection:	18 ... 30 VDC reverse polarity protection approx. 100 mA (unloaded) extern: T 0.5 A
Power supply (AC): (Option)	Input voltage: Power consumption: Fuse protection:	115 ... 230 VAC (50 ... 60 Hz) approx. 3 VA (unloaded) extern: T 0.1 A
Encoder supply: (6.571T.XXX.X0X)	DC version: AC version:	24 VDC (approx. 1 V lower than the power supply voltage), max 250 mA 24 VDC (± 15%), (max 150 mA until 45°C / 80 mA by more than 45°C)
Encoder supply: (6.571T.XXX.XAX)	DC version: AC version	24 VDC (approx. 1 V lower than the power supply voltage), max 250 mA or 5 VDC (± 15%), max. 250 mA 24 VDC (± 15%) (max 150 mA until 45°C / 80 mA by more than 45°C) or 5 VDC (± 15%), max. 250 mA)
Incremental inputs: (6.571T.XXX.X0X)	Number of inputs (channels) Configuration: Format: Frequency: Load:	2 (A, B) PNP, NPN, Namur or Tri-State HTL (Low 0 ... 3 V, High 9 ... 30 V) max. 250 kHz max. 6 mA / Ri > 5 kOhm / 470 pF
Incremental inputs: (6.571T.XXX.XAX)	Number of inputs (channels): Configuration: RS422: HTL differential HTL PNP / NPN: Load:	4 (A, /A, B, /B) RS422, HTL differential, HTL PNP or HTL NPN max. 1 MHz (RS422 differential signal > 0.5 V) max. 500 kHz (HTL differential signal > 2 V) max. 250 kHz (Low 0 ... 3 V, High 9 ... 30 V) max. 3 mA / Ri > 10 kOhm / 47 pF
Control inputs:	Number of inputs: Format: Frequency: Load:	3 HTL, PNP (Low 0 ... 3 V, High 9 ... 30 V) max. 10 kHz max. 2 mA / Ri > 15 kOhm / 470 pF
Accuracy:	Measurement:	+/- 50 ppm, +/- 1 digit
Analog output: (Option)	Configuration: Voltage output: Current output: Resolution: Accuracy: Reaction time:	current or voltage operation -10...+10 V (max. 2 mA) 0/4 ... 20 mA (burden: max. 270 Ohm) 16 Bit ± 0,1 % < 150 ms
Control outputs: (Option)	Number of outputs: Format / level: Output current: Reaction time:	4 5 ... 30 V (depend on COM+ voltage), PNP max. 200 mA < 1 ms
Relay outputs: (Option)	Number of outputs: Configuration: AC-Switching capacity: DC-Switching capacity Reaction time:	2 potential free changeovers max. 250 VAC / 3 A / 750 VA max. 150 VDC / 2 A / 50 W < 20 ms
Serial interface: (Option RS232 or RS485)	Format: Baud rate:	RS232 or RS485 (see order code) 9600, 19200 or 38400 baud
Display:	Type: Display range: Digit height Color: Operation:	Graphic LCD with backlight 8 digits plus sign (-99999999 ... 99999999) 13 mm height red / green / yellow (selectable) resistive touchscreen
Housing:	Material: Mounting: Dimensions (w x h x d): Cut out (w x h): Protection class: Weight:	ABS, UL 94 V-0 panel 96 x 48 x 116 mm / 3.78 x 1.89 x 4.56 inch 91 x 43 mm / 3.58 x 1.69 inch IP65 (front), IP20 (rear) approx. 200 g
Ambient temperature:	Operation: Storage:	-20°C ... +60°C / -4 ... 140°F -25°C ... +70°C / -13 ... 158°F
Conformity and standards:	EMC 2014/30/EU: LV 2014/35/EU: RoHS 2011/65/EU:	EN 61000-6-2, EN 61000-6-3, EN 61000-6-4, EN 61326-3-2 EN 61010-1 EN 50581

Kübler Group
Fritz Kübler GmbH
Schubertstrasse 47
78054 Villingen-Schwenningen
Germany
Phone +49 7720 3903-0
Fax +49 7720 21564
info@kuebler.com
www.kuebler.com

pulses for automation